Residential Decks

Permit and Construction Guidelines Under the 2006 IRC

Photo courtesy of Chris Moretina

For questions call:

City of Belton, Inspection Department, 816 331-4331

*Note: Design of guardrail must be in compliance with the requirements of the 2006 International Residential Code

Residential Decks
Permit and Construction Guidelines

Builders and homeowners are required to obtain a permit prior to constructing, altering or replacing a deck.

Plan Submittals

The following information shall be submitted to the building department for their review in order to obtain a deck permit. All of the information shown on the sample documents should be contained in all plan submittals. Additional information may be necessary. Plan review fees and permit fees will vary from one jurisdiction to another.

The first requirement is submittal of a **Site Plan,** drawn to scale, for the property where the deck is to be built. Please provide all the information shown on the sample.

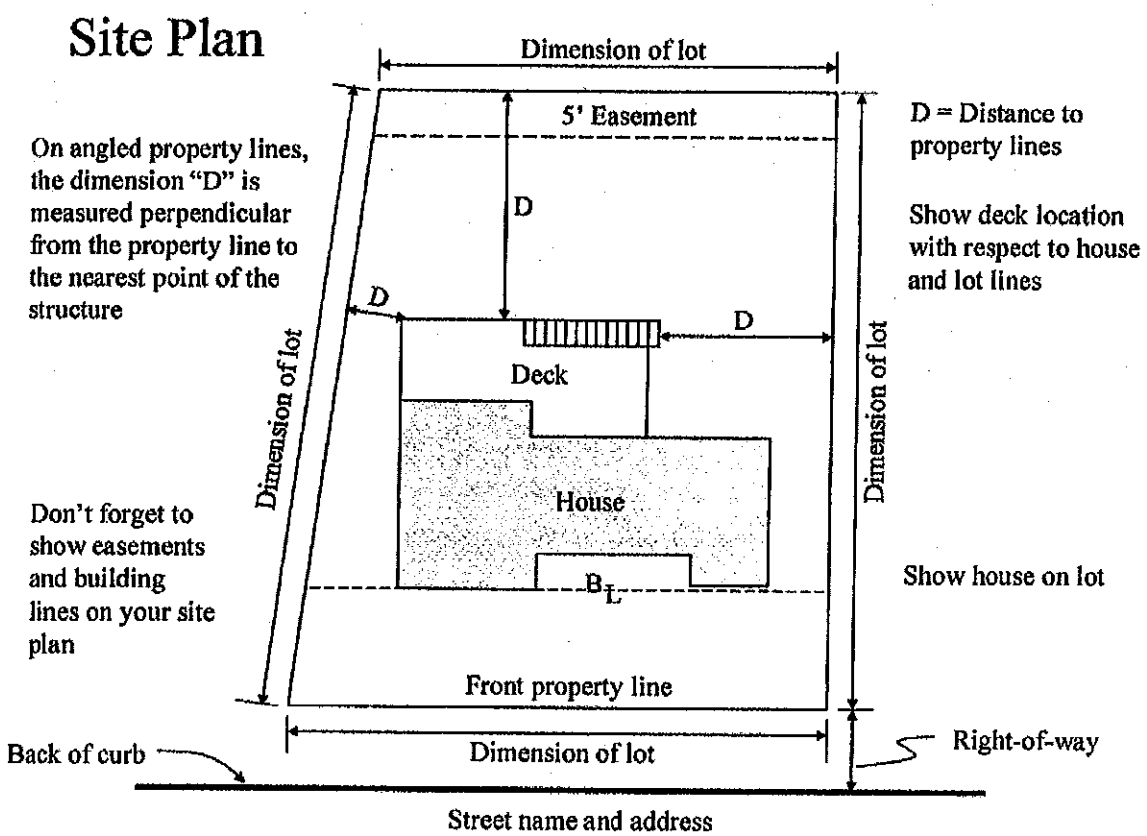

Figure 1

All lot dimensions shall be shown on the Site Plan. The distances to property lines must meet any side and rear yard setback requirements. This Site Plan may be drawn by the builder or the homeowner and does not have to be sealed by a design professional.

The second requirement in obtaining a permit is the submittal of a **Deck Plan** drawn to scale. This plan should contain as much information as possible about the deck and its construction. The information shown on the sample Deck Plan is the minimal requirement for the plan review process. Additional information may be required by the building department in order to complete their review. This plan may also be drawn by the builder or the homeowner and does not require the seal of a design professional. Some designs and construction methods may, however, require the use of an architect, engineer or other design professional.

Deck Plan

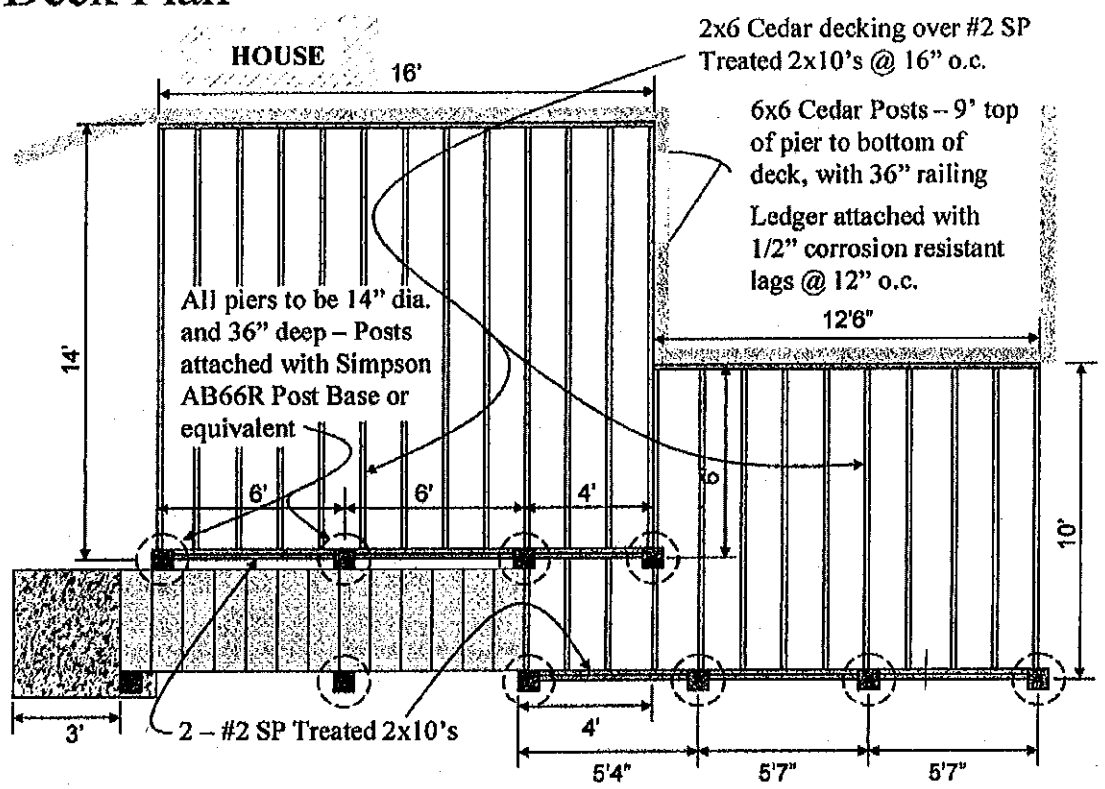

Figure 2

The specific construction information shown on the sample Deck Plan can be found in the tables and diagrams that are provided with this document. Refer to the tables for specific requirements for designing joists, beams, posts, deck piers and connecting the deck to the house. The stair stringers must also be cut and connected properly and must not exceed the spans specified for safety reasons. The information contained in this document should not be considered a complete list of code requirements.

Spans for decking material

Decking – 300# Concentrated Load		
Member	Species/grade	Max. span
2x6	SP #2 ACQ	2'-6"
2x6	Cedar #2	2'-0"
5/4x6	SP #2 ACQ	2'-0"
5/4x6	Cedar #2	1'-4"
5/4x6	Trex	1'-4"

Table 1

A variety of decking materials may be used for the flooring and railings. Please specify the size and type of material

and the framing direction, such as '5/4 Radius Edge Cedar Decking running at a 45 degree angle to the floor joists.' This is important because certain products like Radius Edge Decking have limited span capabilities as shown in Table 1.

The deck must be constructed of either a naturally decay-resistant lumber or a pressure-treated lumber (ACQ) and be designed to support a live load of 40 psf. All overhead power lines must be located at least 10 feet above the deck floor or be at least 3 feet horizontally away from the floor surface. An exterior light for the deck and lighting on the stairs is required.

Columns and Piers

The size of the wood columns and concrete piers that are required to support a deck is based on the square footage of deck being supported by that column and pier. This square footage can be determined by using Figure 3 as an example. A column and pier supports an area of deck that is half way to the next support in any direction. The house is considered a support. In Figure 3 below, the interior post supports half the joist span going back to the house and half the joist span going toward the outside edge of the deck. Since each set of joists span 8 feet, the post and pier supports 4 feet of the span in each direction. That means the interior post and pier are carrying a total of 8 feet parallel to the joists.

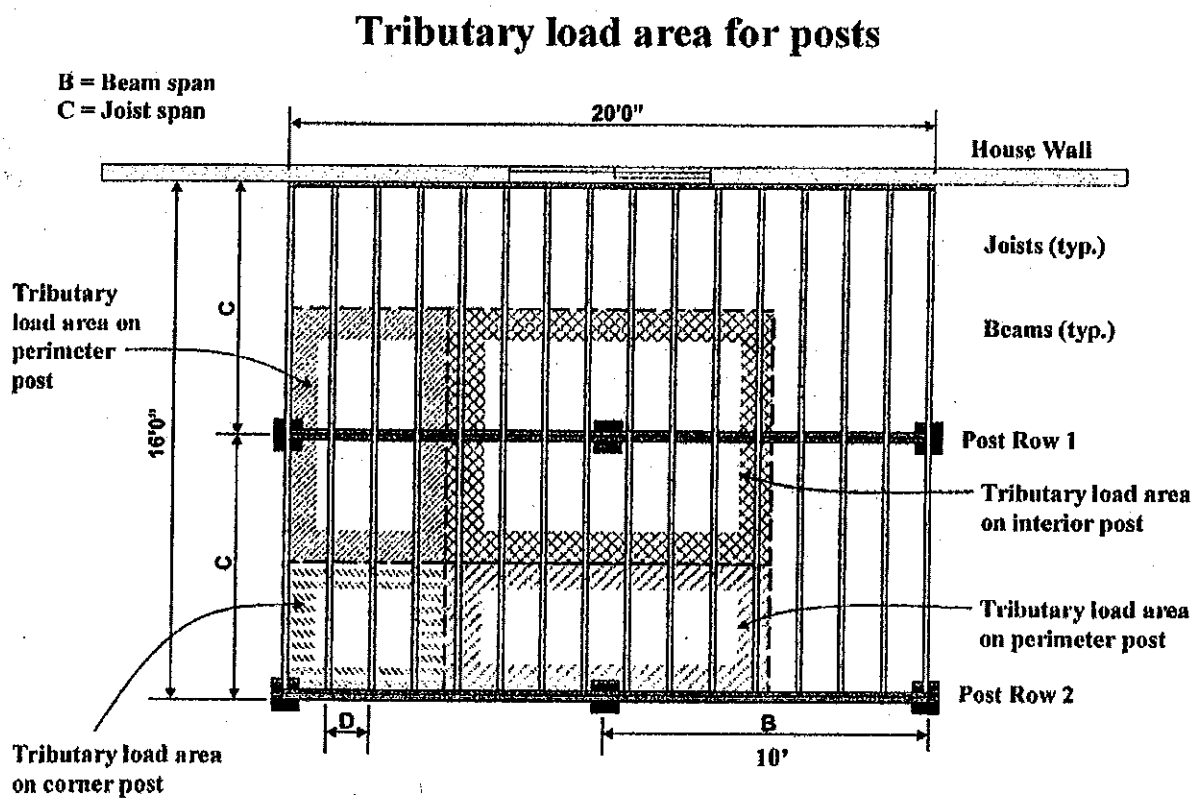

Figure 3

We then determine the distance between posts and piers parallel to the beam. Since the posts are set 10 feet apart in this diagram, the interior post and pier supports 5 feet in both directions for a total of 10 feet along the length of the beam. These two dimensions then give us an area of

80 square feet of deck supported by the interior post. The perimeter posts carry half the area the interior post carries, or 40 square feet, and the corner posts carry half the area of the perimeter posts, or 20 square feet. Now the size of the columns and the piers can be determined using Tables 2 and 3.

Table 2 on the right shows the size of post that is required to support a specified area of deck and the height that post may be. The maximum post height is measured from the top of the concrete pier to the bottom of the beam the post supports. This same post may continue on up to provide support for the guardrail around the deck, but that additional length is not counted as part of the maximum post height.

Maximum post heights for 40 lb/ft² deck design

Species	Post size	40 lb/ft² live load – 10 lb/ft² dead load Tributary load area to post (ft²)													
		36	48	60	72	84	96	108	120	132	144	156	168	180	192
Southern pine	4x4	10'	10'	10'	9'	9'	8'	8'	7'	7'	6'	6'	6'	6'	5'
	4x6	14'	14'	13'	12'	11'	10'	10'	9'	9'	8'	8'	8'	7'	7'
	6x6 (No. 1)	17'	17'	17'	17'	17'	17'	17'	17'	17'	17'	17'	17'	16'	16'
	6x6 (No. 2)	17'	17'	17'	17'	17'	17'	17'	17'	16'	16'	15'	14'	13'	13'
Redwood Western Red Cedar	4x4	10'	10'	9'	8'	7'	7'	6'	6'	5'	4'				
	4x6	14'	13'	12'	11'	10'	9'	8'	8'	7'	7'	7'	6'	6'	5'
	6x6 (No. 1)	17'	17'	17'	17'	17'	17'	17'	17'	16'	15'	15'	14'	14'	13'
	6x6 (No. 2)	17'	17'	17'	17'	17'	16'	13'	7'						

Table 2

To use the table, simply find the square footage of deck being supported by the post, and match it with the species and size of the post to find the maximum height of that particular column.

Footing for use in ground frost areas

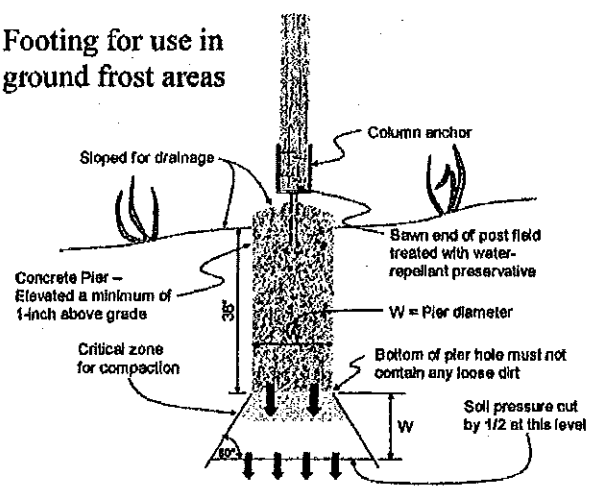

Figure 4

A critical part of the deck construction is the concrete pier that supports each post. If they are too small the deck could settle over time and become uneven. To use Table 3, select the square footage of deck supported by the pier. This is the same area that was just used for the post sitting on the pier. Based on the square footage being supported, select the diameter of the pier required. Remember that all piers are to be a minimum of 36 inches deep to go below the frost line. At least 1-inch of the pier should be elevated above grade with the top sloped for drainage.

Pier sizes can be chosen individually, based on the square footage of deck supported by each pier. That would mean each pier might require a different diameter hole. An easier way is to determine the largest diameter hole required and make all the holes that size. This method will, however, require more concrete. Which ever way it is done, this information must be shown on the Deck Plan.

Once the post and pier sizes are determined, a connection must be made between the post and the pier. This connection must resist lateral movement as well as uplift. That means a column anchor must be used to attach the post to the pier. A 'drift pin' simply drilled into the bottom of

the post is not sufficient. The sample plan states a Simpson AB66R Post Base or equivalent is being used to anchor the post to the pier. Be sure to specify some type of column anchor on the plans. Column anchors are made to fit 4x4 or 6x6 posts. Some column anchors are designed to be set directly in the concrete when it is poured. Others can be drilled into the concrete later so they can be placed exactly where they need to go after the concrete has set up.

Pier sizes based on deck area supported

Pier diameter	Square footage of deck that can be supported
8"	14
10"	20
12"	32
14"	40
16"	56
18"	72
20"	88
22"	104
24"	126

Based on 2000 psf allowable soil bearing capacity

Table 3

Ledger to House Connection

Decks are usually supported on one side by a ledger attached to the house. This ledger attachment is critical to insure the deck is safely and securely supported at this point. When the ledger is attached to the house, there are very specific requirements that must be met. Follow the diagrams closely for the proper attachment of the ledger.

The deck ledger shall *not* be nailed to the house. It must be lagged or bolted to the rim joist of the house which in turn must be securely attached to the framing of the structure and sitting on the foundation wall. Use Table 4 to determine the proper attachment of the deck ledger to the rim joist of the house.

Required size and spacing of corrosion resistant lag screws for attaching deck ledger to house for a given joist span

On-center spacing of lag screws (inches)					
Lag size	**Joist span (feet)**				
1/2" dia. Lag	0 – 5 ft	6 – 7 ft	8 – 10 ft	11 – 14 ft	15 – 18 ft
	32" o.c.	24" o.c.	16" o.c.	12" o.c.	8" o.c.
Equivalent spacing joists @ 16" o.c.	Every other joist space	Two every third joist space	Each joist space	Each joist space with two every other space	Two in each joist space
3/8" dia. Lag	0 – 4 ft	5 – 6 ft	7 – 8 ft	9 – 12 ft	13 – 18 ft
	24" o.c.	16" o.c.	12" o.c.	8" o.c.	6" o.c.
Equivalent spacing joists @ 16" o.c.	Two every third joist space	Each joist space	Each joist space with two every other space	Two in each joist space	Two each joist space with three every other space

Table 4

The size and spacing of the lag screws is based on their capacity. Lag screw values are assumed to be 325 pounds for 1/2-inch lag screws and 190 pounds for 3/8-inch lag screws. The span of the floor joists determines how much load is being transferred to the ledger and thus to the lag screws. Use Table 4 by picking a lag screw size and then find the span of the floor joists.

Under the span will be the required on-center spacing of the lag screws. Since some lag screw spacing will interfere with the framing layout, an equivalent spacing is also provided that may be used in lieu of the specified on-center spacing when the joists are laid out at 16" o.c.

Pilot holes shall be drilled for lag screws 1/2 inch or larger. The clearance hole for the shank shall have the same diameter as the shank. The lead hole for the threaded portion shall have a diameter equal to 60% to 75% of the shank diameter. Pilot holes shall not be drilled for 3/8 inch lag screws. All lags and nails used to connect framing members will be placed at least 2 inches from the ends and edges of the lumber as shown in Figure 5.

The use of lag screws, along with all the other metal connectors used to build a deck, brings us to a very important point. The use of proper fasteners and connections with treated lumber is critical to the overall performance of the structure. Standard carbon-steel nails and fasteners will rust and corrode with time, causing unsightly stains and possibly an eventual failure to hold securely. Therefore, the lag screws supporting the ledger, and all other connectors used in constructing a deck, must be hot dipped galvanized or stainless steel. G60 Electroplated fasteners are ***not*** recommended for use with treated lumber. Since treated wood will corrode standard carbon-steel and aluminum, it is of extreme importance that all the connectors and flashings used in deck construction be able to withstand direct contact with this material. The new ACQ and CA treatments that will replace CCA after December 31, 2003, are even more corrosive than their predecessor. Therefore, it will be even more important to use hot dipped galvanized or stainless steel connectors in lieu of standard carbon-steel fasteners. Check with your supplier to be sure you are getting the proper corrosion resistance on all connecting hardware, such as joist hangers and column anchors as well as lag screws, deck screws and nails.

Deck ledger attachment to house

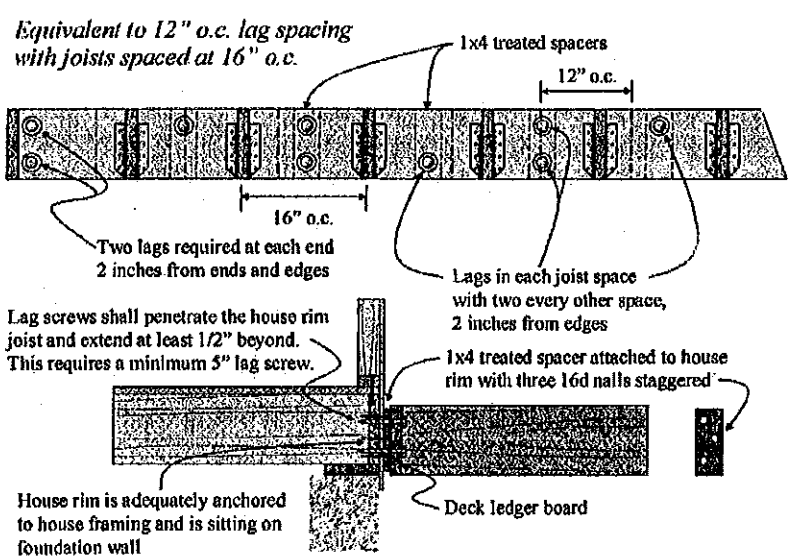

Figure 5

Figure 5 describes the equivalent spacing of lag screws when joists are spaced at 16" o.c. This equivalent spacing described in Table 4 may be used in lieu of the on-center spacing listed.

Many individuals have attached ledgers directly against hardboard siding. This will lead to the eventual deterioration of the siding. Therefore, a 1x4 treated spacer shall be placed between the siding and the ledger board to allow for water drainage and for air to get to the siding so it can stay dry.

The attachment of the 1x4 is made using 3 – 16d hot dipped galvanized nails in a staggered pattern, nailed through the siding and into the rim joist of the house. The lag screws must then go through the 1x4 and into the house rim joist. Note that this attachment requires the lag screw

to penetrate the house rim joist and extend at least 1/2" beyond. That means this connection requires a minimum 5" galvanized lag screw with a standard galvanized washer.

Some builders or homeowners may want to remove the siding and attach the ledger directly to the rim joist of the house. This requires very close attention to flashing details so water cannot get to the house rim and cause structural damage to it and possibly even the ends of the floor joists. Figure 6 shows that proper flashing extends at least 6 inches up behind the siding and housewrap. The flashing should then extend down past the ledger board and end with a drip-edge at the bottom. To avoid deterioration, the flashing must be galvanized steel and not aluminum. Holes drilled for the lag screws should be caulked before the ledger is applied to prevent water from entering the main structure of the house. Galvanized or stainless steel washer spacers assure drying of the 2x ledger.

The house rim joist must be securely anchored to the house framing and it must be sitting on the foundation wall. Ledgers shall not be attached to cantilevers unless the connection is engineered or the following prescriptive method is followed. Note there are limitations imposed on this prescriptive method. Be sure to follow all the details very closely.

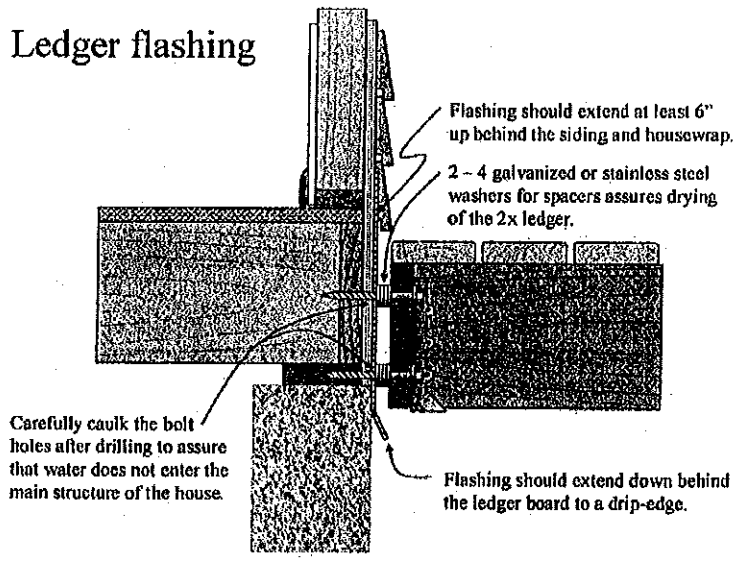

Figure 6

Attaching a Deck to a Cantilever

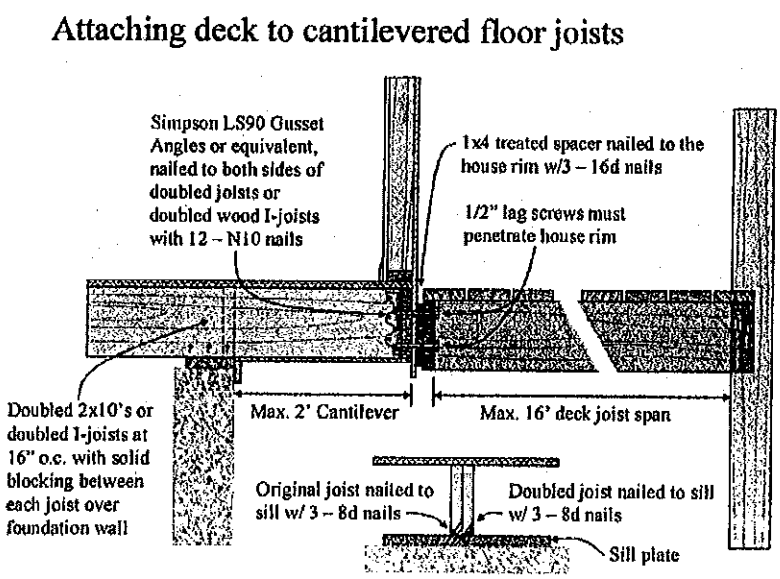

Figure 7

In order to attach a deck to a cantilevered portion of a house, it is critical that the rim joist be able to carry the added load of the deck in addition to the weight of the exterior wall which is already sitting on it. Since the rim joist is only nailed into the ends of the floor joists, that connection is not sufficient to support the extra load imposed on it by the deck. This is especially true with wood-I joists which only have two nails connecting the rim to each wood-I.

The first requirement for attaching a deck to a cantilever is the house joists must be 2x10's or wood-I joists spaced at 16 inches on-center. Each 2x10 joist must then be doubled with an additional 6 foot No. 3, Doug Fir, 2x10 nailed together with 10d common nails at 16 inches on-center staggered. Wood-I joists must also be doubled with 30-inch long web stiffeners added. The web stiffeners shall be nailed on with a row of 4 – 10d nails every 16 inches. The original joists and the added joists will each be toe-nailed to the sill plate with 3 – 8d nails. Solid blocking between the 2x10 joists or wood-I's shall be provided over the foundation wall.

The next thing that must be done is to attach the rim joist to the doubled floor joists with Simpson LS90 gusset angles or their equivalent. These angles are designed to transfer the load imposed on the rim by the deck back into the doubled joists. Each of these gusset angles shall be nailed on with 12 – N10 nails, six nails into the rim and the other six into the doubled joists.

Attaching deck to cantilevered floor joists

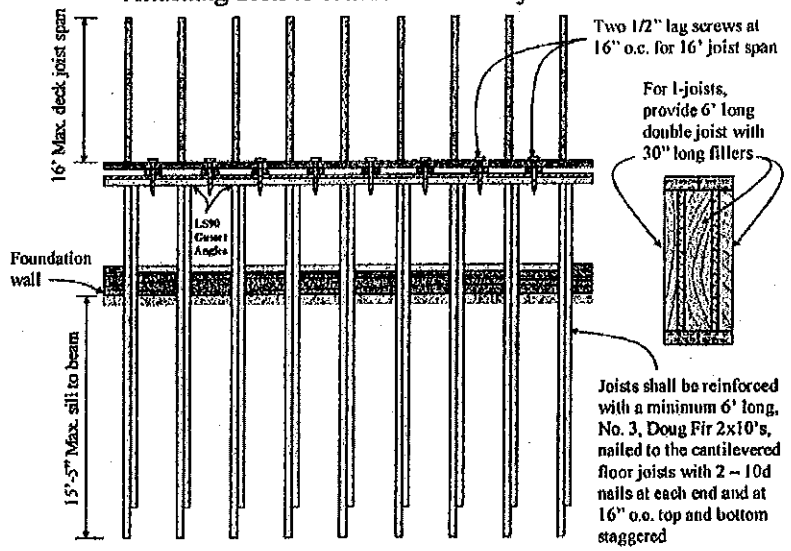

Figure 8

The maximum deck joist span for this application is 16 feet. This maximum span would require two 1/2-inch lag screws between each deck joist if they are laid out at 16 inches on-center. Figures 7 and 8 show elevation and plan views detailing how a deck ledger shall be attached to a cantilevered floor system.

Headering off a cantilever

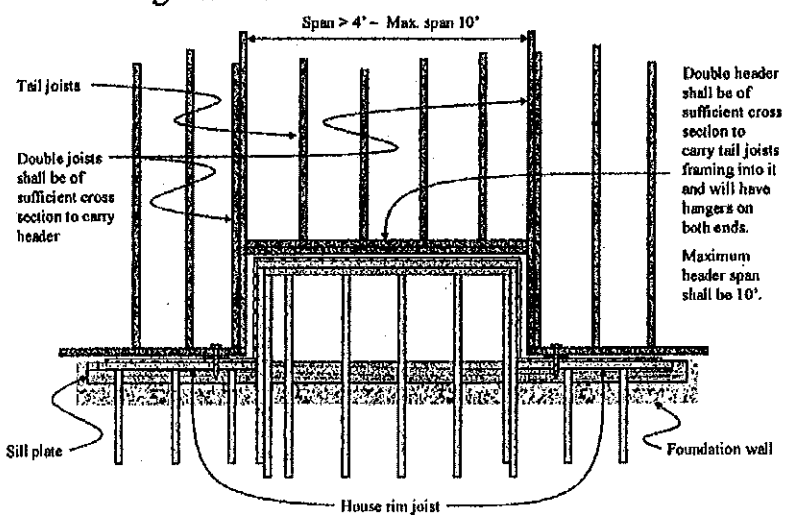

Figure 9

Framing around a chimney or bay window which extends beyond the exterior wall of the house may be accomplished by headering across the chimney or bay window area with a double header attached to double joists on each side. Doubling of these members is required when the header span is greater than 4 feet. The double joists and header shall be of sufficient cross section to carry the tail joists framing into the header.

The header shall be supported on each end by a double joist hanger when the header span exceeds 6 feet. Tail joists over 12 feet long shall be supported at the header by joist hangers. A space shall be provided between the doubled framing members and the house to allow for water drainage and air circulation.

Joist and Beam Spans

Floor joists and beams have certain span capabilities based on the size, grade, species and spacing of the material used for the joists or beams and the loads that are imposed on them. Deck joists are required to be designed for 40 pounds per square foot, just like a residential floor. Most joist material used for building decks is No. 2 and better, treated Southern Pine. There are two sets of spans for treated Southern Pine shown in the table on the right. The visually graded column is the one to use. The wet service column is for applications where the wood is going to be wet for an extended period of time. Deck material gets wet and then dries out, so it is not considered wet service.

Treated Southern Pine Span Tables

Floor Joists — *40 psf Live Load, 10 psf Dead Load, ℓ/360*

Size *Inches*	Spacing *Inches o.c.*	No. 2 *Visually Graded*	No.2 *Wet Service*
2 x 6	12	10-9	10-4
	16	9-9	9-5
	24	8-6	7-10
2 x 8	12	14-2	13-8
	16	12-10	12-5
	24	11-0	10-2
2 x 10	12	18-0	17-5
	16	16-1	15-10
	24	13-1	13-1
2 x 12	12	21-9	21-2
	16	18-10	18-10
	24	15-5	15-5

Design values for dimension lumber are based on normal use conditions (moisture content ≤19%). These values are intended for use in covered structures, or where the moisture content in use does not exceed 19% for an extended period of time.

Table 5

To find the span capabilities for the deck joists, find the size of material being used and the on-center spacing. Then read down under the No. 2, visually graded column to find the appropriate span. Joist spans are measured from unsupported edge to unsupported edge. See Figure 10 for a visual representation of how a joist span is measured.

Joist span measurement and beam to post connection

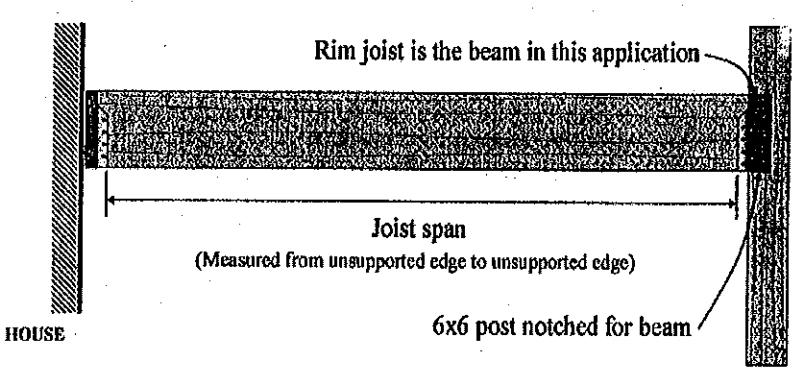

Figure 10

Remember that the ends of the joists will need to be properly supported. If they are running between the ledger and a beam, they will need joist hangers on both ends.

Calculating beam spans is a bit more complicated than floor joists. First, the tributary width supported by the beam must be determined. For simple spans the tributary width is 1/2 the joist length. For a center beam the tributary width is the sum of 1/2 the span from each side. If there is a cantilever, we add in the total length of the cantilever. Note that 2x8 and larger floor joists cannot cantilever more than 3 feet.

Tributary load width (t) for deck beams

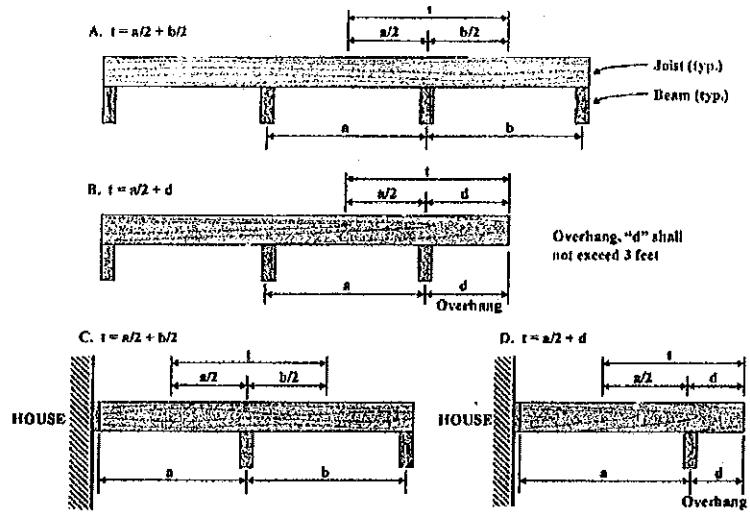

Figure 11

Once the tributary area has been determined, the beam span can then be determined using Tables 6 or 7. Decide what will be used for the beam and check the span based on the tributary load width. If 2 – 2x10's are going to be used as the beam and the tributary area of the beam is 7 feet, the maximum span for the beam is 9 feet, 2 inches.

Maximum beam spans for Treated Southern Pine

40 lb/ft² live load – 10 lb/ft² dead load									
Beam size	Tributary load width (ft)								
	4'	5'	6'	7'	8'	9'	10'	11'	12'
2x6	5-7	4-9	4-2	3-8	3-4	3-1	2-10	2-8	2-6
2x8	7-2	6-2	5-5	4-10	4-3	4-0	3-9	3-6	3-4
2x10	8-7	7-8	7-0	6-2	5-7	5-1	4-9	4-5	4-3
(2)2x6	7-10	7-0	6-5	5-11	5-7	5-2	4-9	4-5	4-1
(2)2x8	10-1	9-1	8-3	7-8	7-2	6-9	6-3	5-10	5-5
(2)2x10	12-0	10-9	9-10	9-2	8-5	8-1	7-8	7-4	7-0
(2)2x12	14-0	12-7	11-6	10-8	10-0	9-5	9-0	8-7	8-2
(3)2x8	12-10	11-10	10-10	10-0	9-5	8-10	8-5	8-0	7-6
(3)2x10	15-7	14-1	12-10	11-11	11-2	10-7	10-0	9-7	9-2
(3)2x12	18-3	15-5	15-0	13-11	13-1	12-4	11-9	11-2	10-9

Spans are distances in feet-inches between centers of posts or supports. Grade is No. 2 or Better. Number in parenthesis is number of full-length nailed laminations.

Table 6

When multiple members are used, they must be attached so they act as one. This requires nailing the members together with 10d nails at 16 inches on-center staggered.

If a single Cedar 4x10 were going to be used instead of a built-up treated beam, then Table 7 would be used. In the case of our 7 foot tributary area, a 4x10, which by the way, is *not* the same as 2 – 2x10's, has a span capability of 8 feet, 11 inches.

A beam should always be supported directly by the columns beneath it. This is usually accomplished by notching the beam into the post so there is direct wood to wood bearing. Note 6x6 posts are recommended if the beams are to be notched into the posts.

Maximum beam spans for Redwood and Western Red Cedar

40 lb/ft² live load – 10 lb/ft² dead load									
Beam size	Tributary load width (ft)								
	4'	5'	6'	7'	8'	9'	10'	11'	12'
4x6	7-4	6-7	6-0	5-6	5-2	4-11	4-8	4-5	4-3
4x8	9-8	8-8	7-10	7-3	6-10	6-5	6-1	5-10	5-7
4x10	11-10	10-7	9-8	8-11	8-4	7-11	7-6	7-2	6-10
4x12	13-9	12-4	11-3	10-5	9-9	9-2	8-8	8-4	7-11
6x8	9-3	8-3	7-7	7-0	6-7	6-2	5-10	5-7	5-4
6x10	13-2	11-9	10-9	9-11	9-3	8-9	8-4	7-11	7-7
6x12	15-11	14-3	13-0	12-0	11-3	10-7	10-1	9-7	9-2

Spans are distances in feet-inches between centers of posts or supports. Grade is No. 2 or Better.

Table 7

However, there are times when a beam must sit on top of a post. In these cases there must be a positive connection between the post and the beam. Sometimes a 2x scabbed on the side connecting the beam to the column is sufficient, but metal connectors are also available. See Figure 12 for different ways to connect beams to posts.

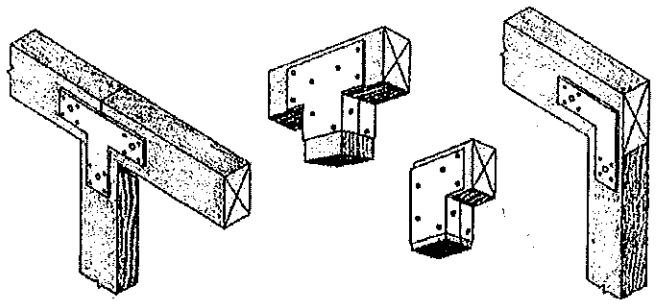

POST-TO-GIRDER CONNECTIONS

Figure 12

Measuring a beam span

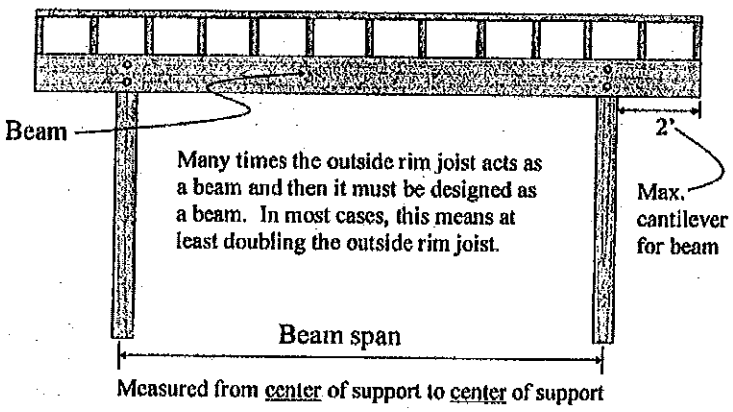

Figure 13

Note that beam spans are measured differently than joist spans. A beam span is measured from the center of support to the center of support. Also notice that a beam may only be cantilevered a maximum of 2 feet beyond the support.

If the beam is not notched into the post then the structural performance of the connection is limited to the capacity of the bolts. In this case, the tributary area that can be safely supported by the beam is greatly reduced. This type of connection should be avoided if at all possible. Notching the beam into a 6x6 post or sitting the beam directly on top of the post allows direct wood to wood bearing, and this will always provide better support.

But, since this type of connection is occasionally used, Tables 8 and 9 have been provided showing the reduced area of deck that can be supported when attaching the beam to a post using only bolts to support the load. Note that the tables specify the size and number of bolts for use with various size beams and posts. The beam sizes in these tables are all based on No. 2, treated Southern Pine.

Beam-to-post connection

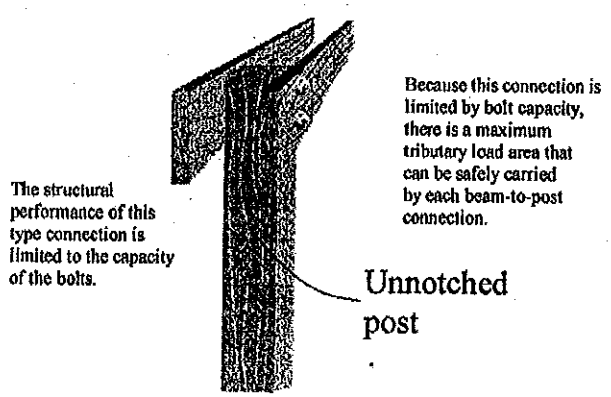

Figure 14

Limitations in tributary load area for beam-to-post connections using 4x4 or 6x6 posts and 1/2-inch-diameter bolts.

Live load (lb/ft²)	Tributary load area (ft²)	
	Southern pine	Redwood & Western Red Cedar
Two-bolt connection (2x6, 2x8)		
40	30	16
Three-bolt connection (2x10, 2x12)		
40	44	34

Table 8

Limitations in tributary load area for beam-to-post connections using 6x6 posts and 5/8-inch-diameter bolts.

Live load (lb/ft²)	Tributary load area (ft²)	
	Southern pine	Redwood & Western Red Cedar
Two-bolt connection (2x8, 2x10)		
40	42	27
Three-bolt connection (2x12)		
40	63	40

Table 9

Cantilevered Decks

It is often desirable to cantilever a deck for aesthetics or for other reasons. Certain considerations must be taken into account when using a cantilever. Deck joists 2x8 and larger may be cantilevered a maximum of 3 feet beyond the supporting beam as shown in Figure 15. The back span for a cantilever must be a minimum of twice the cantilevered distance.

Cantilevered joist detail

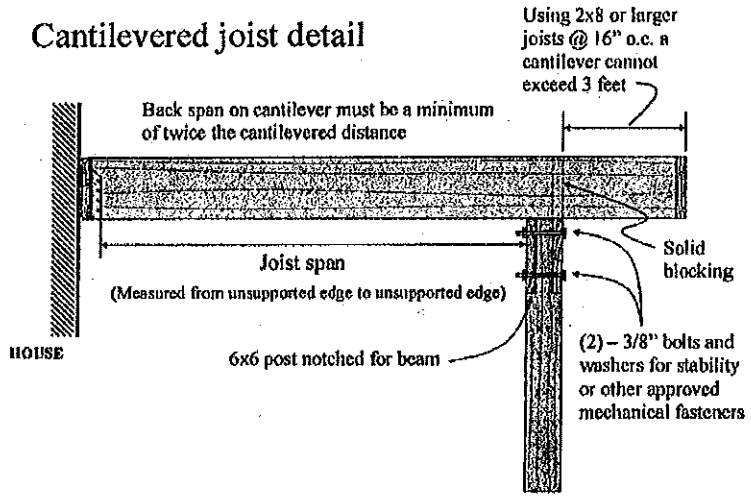

Figure 15

Cantilevered connection

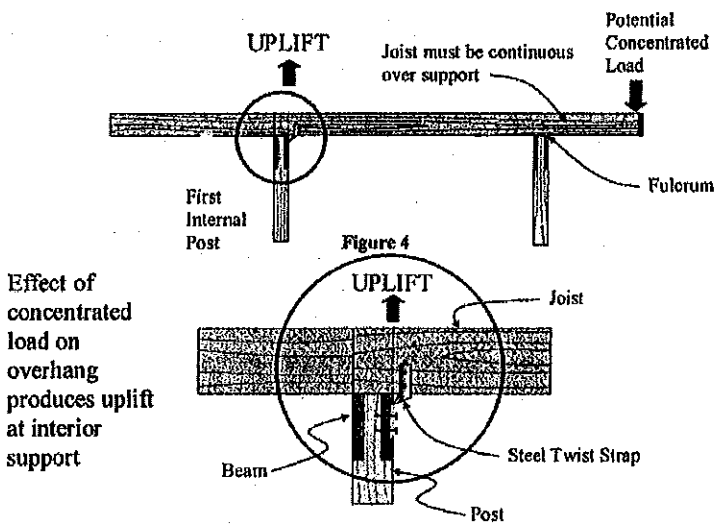

Figure 16

A concentrated load on the end of the cantilever has the effect of producing uplift on the joists at the first interior beam support or at the attachment to the house. When a deck is cantilevered, the connection to the exterior wall of the house or other framing members such as a beam shall be designed and constructed to resist uplift resulting from the full live load acting on the cantilevered portion of the deck. One way of resisting these loads is with a steel twist strap at each end to prevent uplift.

The beams in Figures 15 and 16 are notched into opposite sides of a 6x6 post. Due to the separation of the two members that make up this beam, solid blocking needs to be placed

between the two beam members every 4 feet so they may be securely nailed together in order for them to act as one unit.

Guardrails

For obvious safety reasons, guardrails are required when the deck floor is more than 30 inches above another floor or the grade below. The guardrail shall not be less than 36 inches in height. Open sides of stairs with a total rise of more than 30 inches above the floor or grade below shall have guards not less than 34 inches in height measured vertically from the nosing of the treads.

The perimeter support posts can be incorporated into the railing of the deck. The posts extend from the footings to the top rail cap. Balusters or ornamental closures that do not allow a 4-inch diameter sphere to pass through are used to fill in between the posts. These balusters in combination with the cap rail and bottom rail transfer the loads to the posts. In order to do this successfully, the main railing posts should be spaced approximately 6 feet apart. The advantage of this design is that the full length of the post resists the rail load.

Guardrail detail

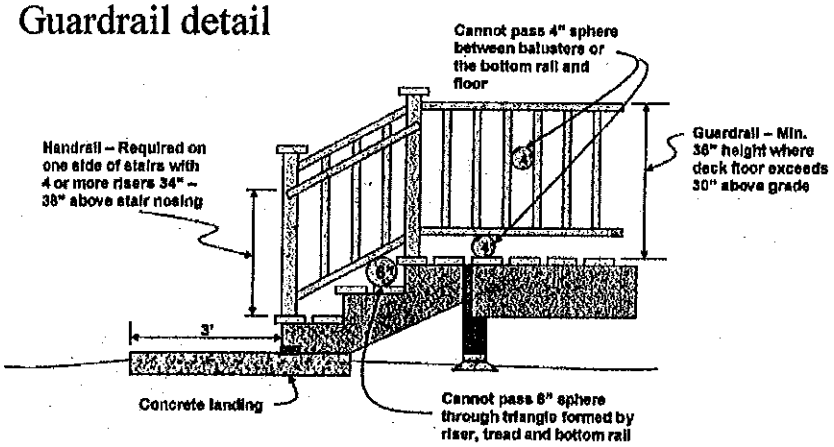

Figure 17

Guardrails and handrails shall be designed to support a single 200 pound concentrated load applied in any direction at any point along the top. This is to be sure the railing can support the loads of people leaning on or running into it.

The guardrail in-fill components which consist of the balusters or panel fillers shall be designed to withstand a horizontally applied load of 50 pounds distributed over a 1 square foot area.

When guardrails posts are not a continuous part of the support post system, they must be attached so they can withstand the prescribed loads without twisting the rim joist. It is therefore necessary to be sure the rim joist is blocked so it cannot rotate. Lag screws into the ends of the perpendicular joists or blocking are the proper connectors for this purpose. Nails into the end grain of the framing lumber will simply withdraw allowing the rim joist to twist. Figure 18 shows the reaction load that is imposed on the top bolt in various size rim joists when the code prescribed load is applied.

Post loaded to Code

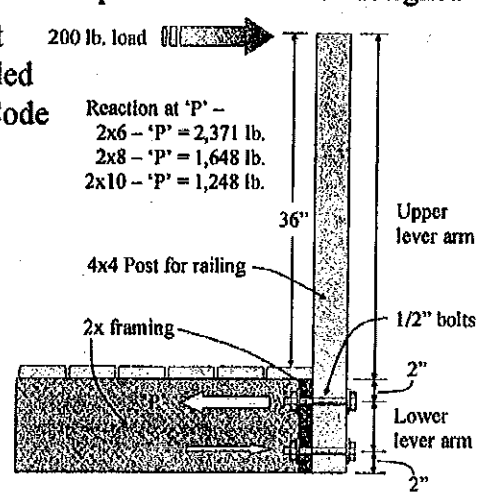

Figure 18

Figure 19 shows a plan view of the connection details for attaching the railing posts to the rim joist and the rim joist to the deck joists. Two lag screws in the deck joists or blocks on each side of the post are necessary to prevent the rim from rotating unless the post is blocked in from behind and lagged to a joist perpendicular to the rim joist. Use 1/2-inch diameter bolts when attaching 4x4 railing posts to the rim joist so it cannot work loose over time. This is especially true when the posts are being attached to the outside edge of the rim.

Reinforced Post Connections
(Plan view)

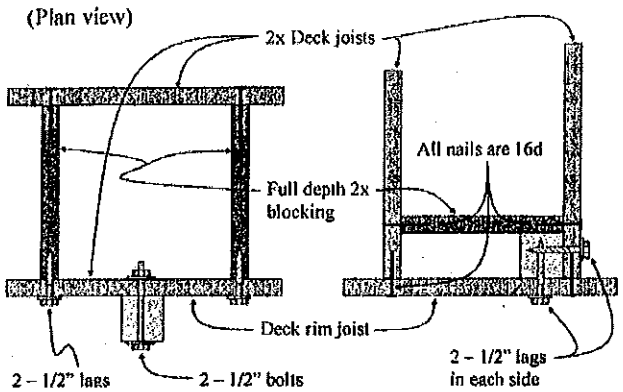

Figure 19

The triangular opening formed by the riser, tread and bottom rail of the guard at the open sides of a stairway is permitted to be of such a size that a 6 inches diameter sphere cannot pass through.

Stairs

Stairways shall have a minimum width of 36 inches. The maximum riser height shall be 7-3/4 inches and the minimum tread depth shall be 10 inches as measured in Figure 21. Open risers are permitted provided the opening between the treads does not allow the passage of a 4-inch diameter sphere. The opening between adjacent treads is not limited on stairs with a total rise of 30 inches or less. The greatest riser height and tread depth within any flight of stairs shall not exceed the smallest by more than 3/8-inch.

Reinforced Post Connections
(Three dimensional view)

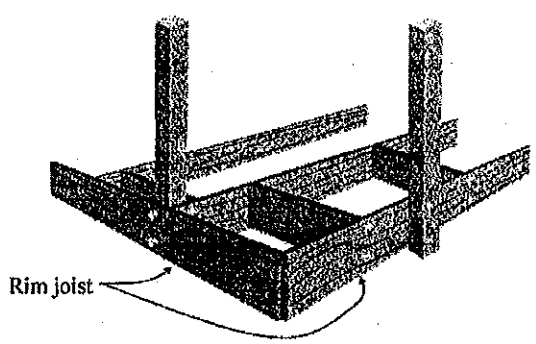

The leverage from a deck railing post will twist the rim joist unless the rim joist is securely fastened to the joist ends or perpendicular blocking. 1/2" lag screws are recommended for resisting code design loads.

Figure 20

There shall be a minimum of two stringers where the spacing between them is 24 inches. This requires the treads to overhang 5 inches beyond each stringer. Three stringers may be used where the outside members are placed 36 inches apart and a third is centered in between. Now the treads are supported on the ends and in the center. This gives us a stronger set of stairs and allows us to meet the concentrated load requirements.

Stair Measurements

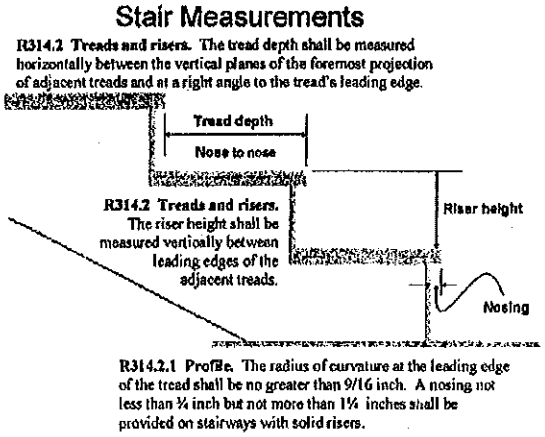

Figure 21

Stair Stringer Detail

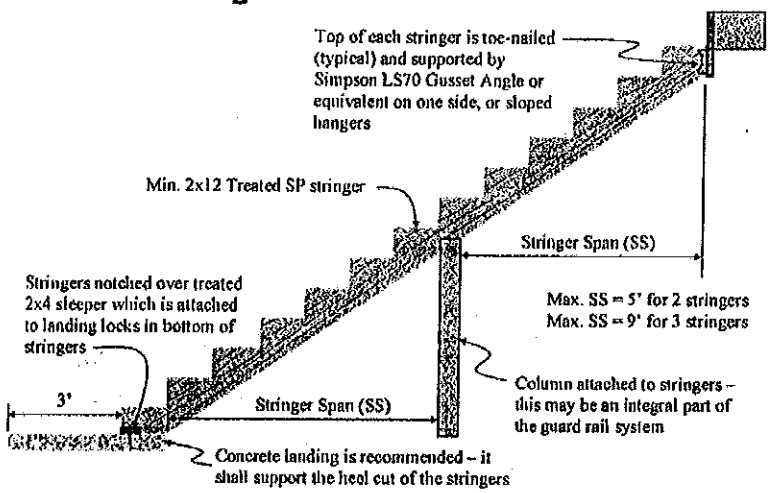

Figure 22

The stair stringers shall be 2x12, No. 2, treated Southern Pine. They must not be over notched when cutting in the rise and run. The cuts in these notches must end at the inside corners and not extend beyond that corner or the stringers will be weakened.

The top of each stringer shall be toe-nailed to a backer or rim joist and then supported by Simpson LS70 gusset angles or their equivalent on one side of each stringer. An alternate method would be to use sloped hangers.

The bottom of these stringers shall rest on a landing. It is recommended that this landing be concrete. The bottom of the stringers shall then be notched over a treated 2x4 sleeper which shall be attached to the landing or the stringers could be notched so they would lock in behind the concrete landing itself. Either way effectively locks the stringers in place so they cannot move.

The stringers also have a certain span capability. When using 2 stringers to support the stairway, the maximum span for the stringers is 5 feet. When using 3 stringers the maximum span is increased to 9 feet. The span is measured horizontally from point of support to point of support. See the diagram on the left.

Spacing the stringers in either manner meets the 300 pound concentrated load requirement on the treads. If the same material that is being used for the decking is going to be used for the stair treads, see Table 1 for span capabilities.

Handrails

Handrails are required on stairs with four or more risers. The handrail shall be continuous the full length of the stairs and shall start at a point directly above the top riser of the flight and continue to a point directly above the lowest riser in the flight. The ends of the handrail shall be returned to the posts at the top and bottom of the stairs.

Handrail geometry

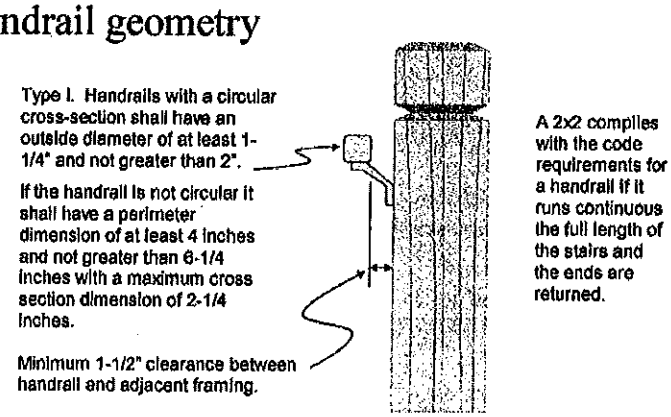

Figure 23

The handrail shall be between 34 inches and 38 inches above the nosing of the treads and shall be provided on at least one side of the stairway. There shall be a minimum clearance of 1-1/2 inches between the handrail and adjacent framing. Type I handrails shall have a circular cross-section with an outside diameter of at least 1-1/4 inches but not greater than 2 inches. If the handrail is not circular it shall have a perimeter diameter of at least 4 inches and not greater than 6-1/4 inches with a maximum cross section of 2-1/4 inches. This means 2x2 lumber with eased edges will meet the requirements of the code.

Inspections

Inspections are another part of the process. These inspections are done as a service to the homeowner and are required for all decks. Inspections should take place when various phases of the construction are completed. Where a deck is too close to the ground to verify the connection between the ledger and the house at the time of the inspection, then the deck shall be self-supporting.

Footing or pier hole inspections may be required before the concrete is placed. Remember that dry set concrete is not approved by most concrete manufacturers. The concrete needs to be properly mixed with the prescribed amount of water prior to placing in order for it to work properly and to meet code.

A separate framing (rough-in) inspection may be required if the under-floor framing and connections cannot be easily inspected during the final inspection. A final inspection is required after all the work is complete.

When scheduling an inspection, try to call 24 hours in advance to set up a time for the inspector to make his visit. The builder or homeowner is not required to be present for the inspections but they are welcome to be there if they would like to be.

This publication was produced by TimberTek Consulting and is endorsed by the Johnson County Building Officials Association. It is published by the Johnson County Contractor Licensing Program for distribution throughout Johnson County. Jurisdictions within Johnson County wishing to obtain copies of this publication for distribution in their community should contact the Johnson County Contractor Licensing Program in Olathe, Kansas.