City of Belton, Missouri

Backflow Prevention Standards

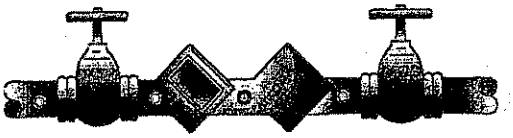

August 1, 2005

IF YOU HAVE ANY QUESTIONS, PLEASE CONTACT

Regarding the plans, backflow prevention, specification and drawings:

Building Inspection – (816) 331 – 4331

GENERAL INDEX

		Page No.
FORWARD		1
SECTION – 1	Discontinuance of Service Cross-Connection	2
SECTION – 2	Installation Requirements for Backflow Preventer Private Fire Service Mains & Backflow Prevention Appendix A	3 3-F 3-F.1
SECTION – 3	Rules of Department of Natural Resources Title 10, Division 60, Chapter 11	4
SECTION – 4	Rules of 2000 International Plumbing Code Section 608, Protection of Potable Water Supply Rules of 2000 International Residential Code Chapters 25 & 29	5
SECTION – 5	City of Belton, Code of Ordinances Division 5. Sec. 22-66 thur Sec. 22-75	6
DRAWING – 1	Typical Cross-Section w/ Double Check Backflow Preventer Outside in Pit (3/4" & 1")	7
DRAWING – 2	Typical Cross-Section w/Double Check Bacflow Preventer Outside in Pit (2")	8
DRAWING – 3	Typical Cross-Section w/ Reduced Pressure Backflow Preventer Outside in an Above-Ground Pit	9
DRAWING – 4	Installation Standards and Requirements Backflow Prevention Devices	10
DRAWING – 5	Typical Cross-Section w/ Double Check on Lawn Sprinkler Branch Line Outside in a Pit	11
DRAWING – 6	Meter Vault for Double Detector Check Backflow	12
DRAWING – 7	Meter Vault for Water Service Meter	13

FORWARD

The City of Belton is dedicated to helping its customers realize optimum value from their water service. Experience has shown that uniform standards for installation are the best way to accomplish our common goals. These standards are not intended to be restrictive or burdensome, but to assist in expediting service connections and backflow prevention assembly installations. It is therefore, required that customer's service line installation and backflow comply with these standards.

This booklet is offered to assist customers, architects, engineers, plumbers, contractors, and inspectors in the plumbing of water service and backflow preventer installations. The City of Belton is not responsible for design or installation of backflow preventers.

No set of rules or instructions will cover all conditions. The City of Belton welcomes and encourages all inquires concerning unusual or special needs to customers.

Where new backflow installations, additions, or alterations are contemplated, inquiry should be made in advance of design or purchase of equipment. Failure to do so may result in unnecessary costs to the customer for backflow relocations and possible delay in providing service.

Due to constant progress in the development of material and methods, some procedures outlined herein may be modified. Upon request, information will be supplied concerning changes and revisions. Persons making regular use of this booklet should maintain contact with the City of Belton.

City of Belton

Section 1

DISCONTINUANCE OF SERVICE CROSS-CONNECTION

No physical connection will be allowed between either a water service line from a main of the City or the internal plumbing of a premised and any pipe, tank, well, cistern, or other appurtenance which contains polluted or otherwise questionable substances or to a water supply not approved by the Missouri Department of Natural Resources. It shall be unlawful for any person to install or maintain any potable water supply piping which fails to comply with the standards set out in Title 10, Division 60, Chapter 11 of the Missouri Code of State Regulations, or the 2000 International Plumbing Code- Section 608, 2000 International Residential Code- Chapters 25 & 26, or City of Belton, Code of Ordinances, Division 5, Section 22-66 thur Section 22-75. Whenever there is a conflict between these entities, the more stringent requirement shall apply.

City of Belton

Section 2

INSTALLATION REQUIREMENTS FOR BACKFLOW PREVENTER

The following items are the installation requirements for a backflow preventer:

A. General Information

All backflow preventers will be installed with the following points in mind:

1. No bypass will be approved or allowed without the same degree of backflow protection installed on bypass (see Drawing No. 6)
2. All backflow preventers will be installed before any tees or wyes, in a horizontal and upright position. The only exception to this requirement is on a lawn sprinkler system (see Drawing No. 5)
3. All backflow preventers will be tested within thirty (30) days of the initial tap, or of installation date, or the anniversary date established by the water purveyor (see State Regulation Sections (6) (b) and (c)), by a State Certified Tester.
4. Backflow preventers will be installed at a location that allows easy access to the assembly maintenance and testing and that will not subject the assembly to excessive heat and freezing.

B. Reduced Pressure Principal Assemblies:

1. Cannot be installed inside a vault that is below grade. Exception: Missouri Department of Natural Resources written approval.
2. Must be installed with a minimum of 12" between the pressure differential relief valve port and the floor (see Drawing No. 3).
3. Will have no plugs or additional piping affixed to the pressure differential relief valve port (except for specifically designed funnel apparatus available from the manufacturer).

C. Double Check Valve Assemblies

1. Will be allowed to be installed in a pit (see Drawing's No. 1, 2 and 5).

Private Fire Service Mains & Backflow Prevention
Policy number 04-01

In addition to the requirements set forth in the City of Belton Backflow Prevention Standards manual, NFPA 13, 24 and the 2000 International Fire Code, private fire service mains, their appurtenances, and backflow prevention assembly's used to isolate private fire service mains from any public water supply shall meet the following requirements prior to system acceptance by the Fire Department.

1. The entire backflow assembly must be listed for fire service use[i].

2. Private fire service mains must be a minimum of 4" and all piping shall be listed for fire service use and comply with AWWA Standards.

3. If the nature of the occupancy served by the private fire service main and/or fire sprinkler system requires a constant supply of water, a second backflow prevention device, installed in parallel, must be provided to allow for service and testing.

4. Means must be provided for forward testing of backflow prevention devices to insure adequate water flow. This test must be completed and accepted by the Fire Prevention Bureau prior to system acceptance[ii].

5. All valves must be permanently marked with weatherproof, metal or rigid plastic signs identifying the purpose of the valve. The signs must be secured with corrosion-resistant wire, chain, or other approved means[iii].

6. Electronic supervision of all valves is required when the valves supply water to 20 or more sprinklers. For systems smaller than 20 sprinklers, the valves must be locked in the open position and the pit door secured with a lock[iv].

The fire department connection (FDC) may be located at the backflow assembly and the backflow assembly used in lieu of a post indicator valve[v] when the following conditions are met:

a. The FDC is located on or within 20 feet of a fire department access roadway.
b. The FDC and backflow assembly are located on the address side of the building.
c. If required, the FDC is clearly marked to indicate which building it serves.

All private fire hydrants shall be painted "traffic yellow" to differentiate them from public hydrants. Any hydrant not yet accepted by the City of Belton and placed "in-service" must be covered with a plastic bag to prevent confusion as to the operational status of the hydrant.

These requirements shall apply to all (including retrofits) private fire service mains and backflow assemblies submitted for plan review after February 1, 2004.

---

[i] NFPA 13-1999 Section 3-1.1
[ii] NFPA 13-1999 Section 10-2.6
[iii] NFPA 13-1999 Section 3-8.3
[iv] 2000 IFC Section 903.4
[v] NFPA 24-1995 Section 2-2.6 requires a PIV at the point of connection to the public water supply.

Figure A-5-15.2(b) Typical city water pit—valve arrangement.

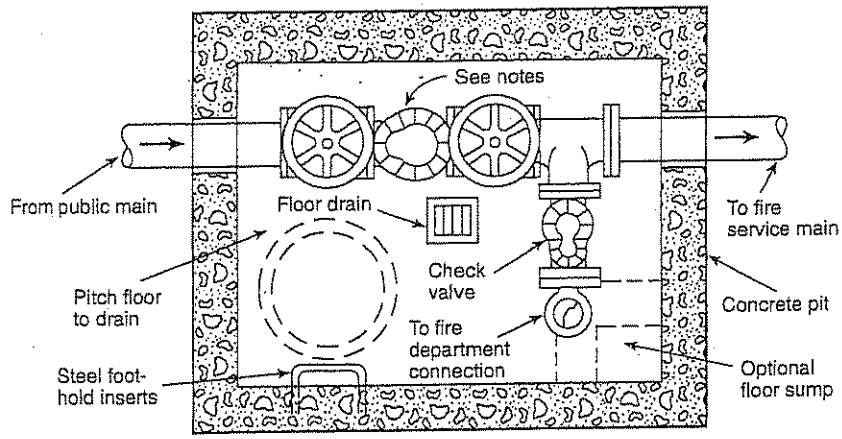

Plan (no scale)

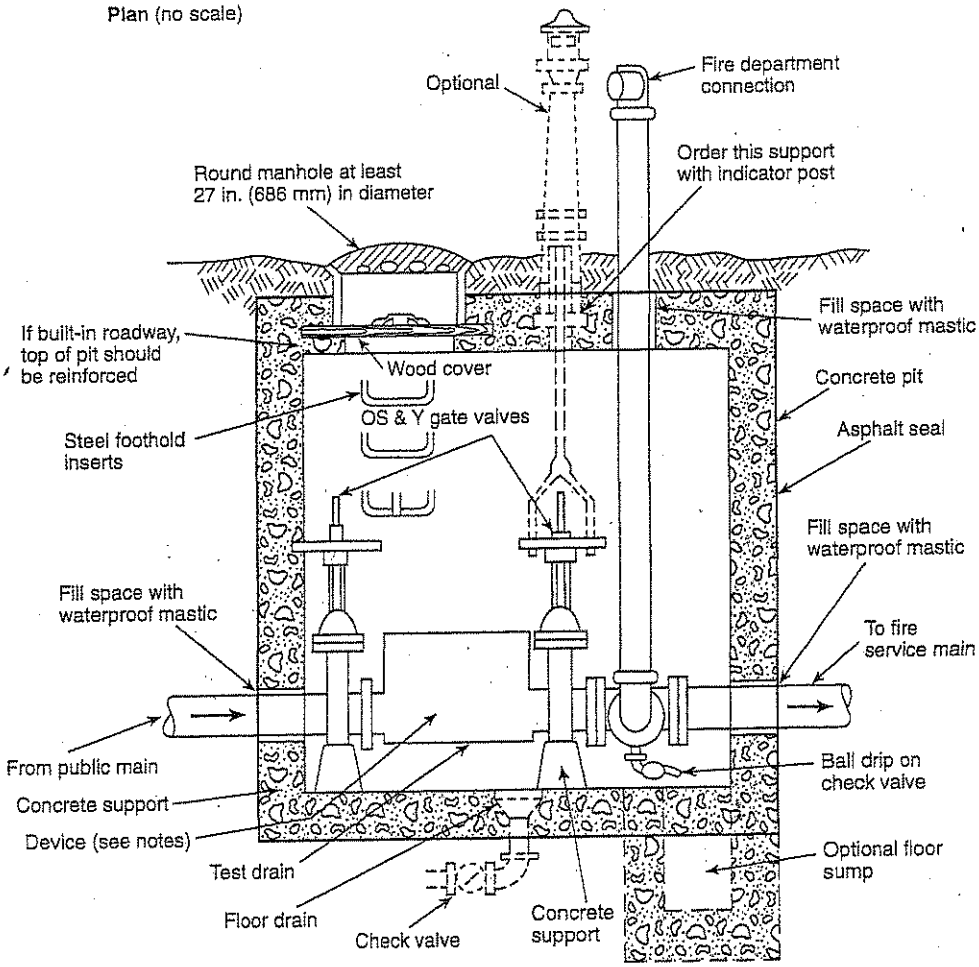

Section (no scale)

Notes:

1. Various backflow prevention regulations accept different devices at the connection between public water mains and private fire service mains.
2. The device shown in the pit could be any or a combination of the following:
(a) Gravity check valve
(b) Detector check valve
(c) Double check valve assembly
(d) Reduced pressure zone (RPZ) device
(e) Vacuum breaker
3. Some backflow prevention regulations prohibit these devices from being installed in a pit.
4. In all cases, the device(s) in the pit should be approved or listed as necessary. The requirements of the local or municipal water department should be reviewed prior to design or installation of the connection.
5. Pressure drop should be considered prior to the installation of any backflow prevention devices.

City of Belton

Section 3

RULES OF
DEPARTMENT OF NATURAL RESOURCES
(Division 60 – Public Drinking Water Program;
Chapter 11 – Backflow Prevention)

Most current list of Approved Backflow Prevention Assemblies as provided by the Department of Natural Resources

(See attached pages)

Rules of
Department of Natural Resources
Division 60—Public Drinking Water Program
Chapter 11—Backflow Prevention

Title	Page
10 CSR 60-11.010 Prevention of Backflow	3
10 CSR 60-11.030 Backflow Prevention Assembly Tester Certification	5

Title 10—DEPARTMENT OF NATURAL RESOURCES
Division 60—Public Drinking Water Program
Chapter 11—Backflow Prevention

10 CSR 60-11.010 Prevention of Backflow

PURPOSE: This rule establishes requirements for protection of public water systems from introduction of contaminants by backflow.

(1) Applicability, Exemptions and Compliance Dates.

(A) Applicability. This rule applies to all community water systems.

(B) Exemptions.

1. This rule does not apply to customer facilities used solely for residential purposes unless a cross-connection is specifically identified or the rule indicates otherwise.

2. The department may issue an exemption from the requirements of paragraphs (3)(A)1. and (3)(B)1. of this rule if the customer can demonstrate to the department, the local governmental authority (if one exists) and the supplier of water that the activities taking place at the customer's facility and the materials used in connection with these activities or stored on the premises cannot endanger the health of customers or degrade the water quality of the public water system should backflow occur, or that any potential risk posed by these materials or activities is isolated from the public water system. Those customers granted an exemption in accordance with this paragraph shall report to the supplier of water any proposed change in process, plumbing or materials used or stored at the exempted facility at least fourteen (14) days prior to making the change.

3. Any exemption granted under paragraph (1)(B)2. of this rule shall be void if the supplier of water, local governmental authority (if one exists) or the department determines that the customer facility has become an actual or potential backflow hazard, or if the customer fails to provide notice at least fourteen (14) days prior to making any change in process, plumbing or materials used or stored at the facility.

(2) Cross-Connections. No customer shall cause or allow the construction or maintenance of an unprotected cross-connection.

(3) Backflow Control by Containment.

(A) Class I Backflow Hazards.

1. A Class I backflow hazard presents an actual or potential health hazard to customers of the public water system should backflow occur. The customer or the customer's authorized representative shall construct a department-approved air-gap separation or install a reduced pressure principle backflow prevention assembly on the customer service line, in accordance with section (4) of this rule, when—

A. The supplier of water or local governmental agency (if one exists) requires protection from an actual or potential Class I backflow hazard at any facility;

B. Modification is made to the customer water system at an existing facility which is designated an actual or potential backflow hazard in paragraph (3)(A)2. of this rule. If an addition or modification requiring a separate customer service line is made to an existing facility, the new service line as well as the existing customer service line shall be equipped with department-approved backflow prevention assemblies;

C. A new customer service line connection is made to a facility listed in paragraph (3)(A)2. of this rule; or

D. A backflow incident occurs which introduces a contaminant into the public or customer water system which may create a health hazard.

2. Following is a list, not all inclusive, of actual or potential Class I backflow hazards:

A. Aircraft and missile manufacturing plants;

B. Automotive plants including, but not limited to, those plants which manufacture motorcycles, automobiles, trucks, recreational vehicles and construction and agricultural equipment;

C. Potable water dispensing stations which are served by a public water system;

D. Beverage bottling plants including, but not limited to, dairies, soft drink bottlers, and breweries;

E. Canneries, packing houses and reduction plants;

F. Car washes;

G. Chemical, biological and radiological laboratories including, but not limited to, those in high schools, trade schools, colleges, universities and research institutions;

H. Hospitals, clinics, medical buildings, autopsy facilities, morgues, mortuaries, veterinary facilities, dental clinics, and other medical facilities;

I. Metal or plastic manufacturing, fabrication, cleaning, plating or processing facilities;

J. Plants manufacturing paper and paper products;

K. Plants manufacturing, refining, compounding or processing fertilizer, film, herbicides, natural or synthetic rubber, pesticides, petroleum or petroleum products, pharmaceuticals, radiological materials or any chemical which would be a contaminant to the public water system;

L. Commercial facilities that use herbicides, pesticides, fertilizers or any chemical which would be a contaminant to the public water system;

M. Plants processing, blending or refining animal, vegetable or mineral oils;

N. Commercial laundries and dye works;

O. Sewage, storm water and industrial waste treatment plants and pumping stations;

P. Waterfront facilities including piers, docks, marinas and shipyards;

Q. Industrial facilities which recycle water;

R. Restricted or classified facilities or other facilities closed to the supplier of water or the department;

S. Fire sprinkler systems using any chemical additives;

T. Auxiliary water systems, including but not limited to alternative water sources;

U. Irrigation systems with facilities for injection of pesticides, herbicides or other chemicals or with provisions for creating back pressure. The backflow assembly may be installed between the customer service line and the irrigation system;

V. Portable tanks for transporting water taken from a public water system;

W. Facilities which have pumped or repressurized cooling or heating systems that are served by a public water system; and

X. Facilities which contain any boiler system and are served by a public water system. The backflow assembly may be installed on the water service line to the boiler.

(B) Class II Backflow Hazards.

1. A Class II backflow hazard threatens to degrade the water quality of the public water system should backflow occur. The customer or the customer's authorized representative shall install, as minimum protection for Class II backflow hazards, a department-approved double check valve assembly on the customer service line in accordance with section (5) of this rule when—

A. The supplier of water or local governmental agency (if one exists) requires protection from an actual or potential Class II backflow hazard at any facility;

B. Modification is made to the customer water system at an existing facility which is designated an actual or potential backflow hazard in paragraph (3)(B)2. If an addition or modification requiring a separate customer service line is made to an existing facility, the new service line, as well as the existing customer service line, shall be

equipped with department-approved backflow prevention assemblies;

C. A new customer service line connection is made to a new facility listed in paragraph (3)(B)2.; or

D. A backflow incident occurs in any situation described in paragraph (3)(B)2. or subsection (3)(C).

2. Following is a list, not all inclusive, of actual or potential Class II backflow hazards:

A. Tanks to store water from the public water system for fire fighting only, unless the tanks meet the requirements of the department for construction to maintain bacteriological quality of the water;

B. Fire sprinkler systems not using chemical additives. This only applies to new fire sprinkler systems or fire sprinkler systems scheduled for modifications;

C. Irrigation systems without facilities for injection of pesticides, herbicides or other chemicals. The backflow assembly may be installed between the customer service line and the irrigation system; and

D. Cross-connections that could permit introduction of contaminants into the public or customer water system and create a nuisance, be aesthetically objectionable or cause minor damage to the public water system or its appurtenances.

(C) Customer facilities not designated a backflow hazard by subsection (3)(A) or (B) may be designated a Class I or Class II backflow hazard by written notification from the supplier of water or the department to the customer. The notice shall specify the nature of the customer activity which necessitates designation of the facility as a backflow hazard, the type of backflow protection required and the date by which the customer shall install or construct this assembly on the customer service line to the facility.

(4) Department-Approved Backflow Prevention Assemblies.

(A) The department shall maintain a current list of approved backflow prevention assemblies and shall make this list available to the public upon request.

(B) The discharge pipe of an approved air-gap shall terminate a minimum of two (2) pipe diameters of the discharge pipe above the flood level rim of the receiving vessel; in no case shall the distance be less than one inch (1").

(C) Only those models of double check valve assemblies and reduced pressure principle backflow prevention assemblies which are approved by the Foundation for Cross Connection Control and Hydraulic Research of the University of Southern California and are on the approved list maintained by the department are acceptable.

(5) Standards of Construction and Installation.

(A) Reduced pressure principle backflow prevention assemblies shall be installed with no plug or additional piping affixed to the pressure differential relief valve port (except for specifically-designed funnel apparatus available from the manufacturer) and with the pressure differential relief valve port a minimum of twelve inches (12") above floor level. Additionally, the assembly shall be installed at a location where any leakage from the pressure differential relief valve port will be noticed, that allows easy access to the assembly for maintenance and testing, and that will not subject the assembly to flooding, excessive heat or freezing.

(B) All double check valve assemblies shall be installed at a location that allows easy access to the assembly for maintenance and testing and that will not subject the assembly to excessive heat or freezing.

(C) Backflow prevention assemblies shall be installed on the customer water system as close as possible to the point of service connection and prior to any other connection or branch line. If it is not possible to install the backflow prevention assembly as described, then installation shall be at the approval of the department.

(D) No bypass piping shall be allowed around a backflow prevention assembly unless the bypass is equipped with the same degree of backflow prevention protection.

(6) Backflow Prevention Assembly Testing and Inspection.

(A) All backflow prevention assemblies shall be inspected and tested by testers certified in accordance with the requirements and procedures in 10 CSR 60-11.030.

(B) Air-gaps shall be inspected each year by a date which is no later than thirty (30) days past the anniversary date established by the supplier of water to ensure that they continue to meet the requirements of subsection (4)(A).

(C) Reduced pressure principle backflow prevention assemblies shall be tested by a certified backflow prevention assembly tester each year by a date which is no later than thirty (30) days past the anniversary date established by the supplier of water to ensure that—

1. The pressure differential relief valve operates to maintain the zone between the two (2) check valves at least two pounds per square inch (2.0 psi) less than the supply pressure;

2. The #2 check valve is leak tight against reverse flow under all pressure differentials; and

3. The static pressure drop across the #1 check valve is at least three pounds per square inch (3.0 psi) greater than the pressure differential between the supply pressure and the pressure in the zone required to open the pressure differential relief valve.

(D) Double check valve assemblies shall be tested each year by a certified backflow prevention assembly tester by a date which is no later than thirty (30) days past the anniversary date established by the supplier of water to ensure that both the #1 and #2 check valves maintain at least one pound per square inch (1.0 psi) differential in the direction of flow and are leak tight against reverse flow under all pressure differentials.

(E) All certified backflow prevention assembly testers shall report to the appropriate governmental authority (if one exists), the supplier of water, the customer, and, if requested, the department the results of inspections or tests conducted in compliance with this section (6). Reports of tests shall contain the signature of the certified backflow prevention assembly tester attesting to the compliance (or noncompliance) of the assembly with established operational requirements. Routine reports shall be submitted within thirty (30) days after making the inspection or test. Falsification of testing or inspection information shall be grounds for removing the tester from the list of testers authorized to operate in Missouri.

(7) Customer Responsibilities.

(A) The customer shall furnish, install and maintain in working order at all times any backflow prevention assembly required by this rule.

(B) To ensure that each backflow prevention assembly required by this rule is in working order, the customer shall have each assembly inspected and tested by a certified backflow prevention assembly tester at the time of construction or installation and at the frequency specified in section (6).

(C) The customer shall permit access to the premises by the certified backflow prevention assembly tester, supplier of water and department representatives, at reasonable times and upon presentation of identification, for inspection of the customer water system or testing of backflow prevention assemblies installed in accordance with this rule.

(8) Responsibilities of the Supplier of Water.

(A) Because backflow may cause a health hazard through transmission of contaminants via the public water system, the supplier of

water shall remove the water meter or otherwise sever the public water system from the customer service line serving a facility when the supplier of water—

1. Has knowledge that the customer is causing or maintaining an unprotected cross-connection;

2. Has knowledge that the customer is failing or refusing to proceed without delay to correct any violation of the provisions of this rule after having been notified to do so;

3. Is so ordered by the appropriate local governmental authority (if one exists); or

4. Is so ordered by the department because of violation of any provision of this rule by the customer.

(B) The supplier of water shall retain records of the reports of inspections, tests and repairs on backflow prevention assemblies for a period of five (5) years.

(C) The supplier of water may develop, for use within his/her service area, written procedures to implement the provisions of this rule. In developing the procedures, the supplier of water will be permitted to take into account existing backflow prevention programs and incorporate ordinances, regulations or requirements of appropriate local governmental authorities. However, the written procedures shall be no less stringent than the provisions of this rule. The department will prepare and make available on request the appropriate forms needed to assist the supplier of water in implementing the provisions of this rule. The supplier of water may submit the procedures to the department for approval.

(D) The supplier of water shall record the date of the initial inspection or test of backflow prevention assemblies required under subsections (3)(A) and (3)(B) and shall require that an annual inspection or test report be submitted by a certified backflow prevention assembly tester. The supplier of water shall establish an annual anniversary date for these inspection or test reports. If these reports are not received by the supplier of water on or before sixty (60) days following this anniversary date, the supplier of water promptly shall notify the customer, the local governmental agency (if one exists) and the department.

(E) The supplier of water shall notify the department within forty-eight (48) hours whenever a cross-connection problem has occurred which resulted in contamination of the public water system.

AUTHORITY: section 640.100, RSMo (Cum. Supp. 1996). Original rule filed May 4, 1979, effective Sept. 14, 1979. Rescinded and readopted: Filed July 11, 1986, effective Jan. 1, 1987. Amended: Filed Dec. 4, 1990, effective July 8, 1991. Amended: Filed Jan. 2, 1997, effective Dec. 29, 1997.*

**Original authority 1939, amended 1978, 1981, 1982, 1988, 1989, 1992, 1993, 1995, 1996.*

10 CSR 60-11.030 Backflow Prevention Assembly Tester Certification

PURPOSE: This rule establishes certification and recertification requirements for backflow prevention assembly tester training programs.

(1) Applicability. This rule applies to all persons seeking certification or recertification as backflow prevention assembly testers. A certified backflow prevention assembly tester shall inspect, test and report on backflow prevention assemblies in accordance with applicable requirements in 10 CSR 60-11.010.

(2) Certification Requirements.

(A) Any person seeking to be a certified backflow prevention assembly tester shall—

1. Satisfactorily complete written and performance (hands on) examinations (including questions specific to Missouri backflow prevention rules) provided by the American Backflow Prevention Association (ABPA) Tester Certification Program or the American Society of Sanitary Engineering (ASSE); and

2. Ensure that ABPA or ASSE notifies the department that the tester has passed the examinations. The department shall not be held liable for any failure of ABPA or ASSE to notify the department that a person has passed the written and performance examinations.

(B) Certification shall be valid for three (3) years. Certification may be renewed in accordance with section (4) of this rule.

(C) Submittal of false information shall be grounds for denying or revoking certification.

(3) Examination Schedule. The department shall, in consultation with training providers, prepare an annual schedule of dates and locations of backflow prevention assembly tester examinations. The department shall make this schedule available to backflow prevention assembly tester training providers and to any interested person upon request. (Training providers may offer additional examinations, at their discretion.)

(4) Recertification Requirements.

(A) Any certified tester seeking to be recertified shall—

1. Satisfactorily complete ABPA's or ASSE's recertification requirements, including examination questions on Missouri backflow prevention rules; and

2. Ensure that ABPA or ASSE notifies the department that the tester has satisfactorily completed the requirements. The department shall not be held liable for any failure of ABPA or ASSE to notify the department that a tester has satisfactorily completed the recertification requirements.

(B) Recertification shall be valid for three (3) years.

(C) Submittal of false information shall be grounds for denying or revoking recertification.

(D) Any certified tester who fails the ABPA or ASSE examination within three (3) years of the effective date of this rule shall, upon request and submission of proof having taken and failed the examination, be granted a one (1)-time one hundred twenty (120)-day extension of his/her certification. The tester shall submit, or ensure that the instructor or testing organization submits, to the department a copy of the course roster and test results or other documentation which in the opinion of the department are equivalent.

(5) Reciprocity. Any backflow prevention assembly tester listed with ABPA or ASSE may be certified by the department upon notification from ABPA or ASSE that the tester has satisfactorily completed an examination on Missouri backflow prevention rules.

AUTHORITY: section 640.100, RSMo (Cum. Supp. 1996). Original rule filed Jan. 2, 1997, effective Dec. 29, 1997.*

**Original authority 1939, amended 1978, 1981, 1982, 1988, 1989, 1992, 1993, 1945, 1996.*

January 3, 2003
(supersedes all prior lists)

MISSOURI DEPARTMENT OF NATURAL RESOURCES
APPROVED BACKFLOW PREVENTION ASSEMBLIES

All backflow prevention assemblies meeting the requirements of AWWA specification C511-97 for reduced pressure principle and C510-97 for double check valves are considered "approved assemblies."

The following is a complete list of these assemblies, as well as double check and reduced pressure principle detector assemblies, that are currently approved by the department.

Assemblies not appearing on this list but which had prior approval are acceptable as long as they test properly.

Unless otherwise specified by the manufacturer, all assemblies are to be installed on cold water applications - below 110° F. Also, all double check valve assemblies, reduced pressure principle assemblies, double check detector assemblies, and reduced pressure principle detector assemblies are approved for HORIZONTAL ORIENTATION ONLY, unless specifically noted.

Use of spare parts other than those of the original manufacturer invalidates the approval.

Shut-off Valves

The backflow prevention assemblies shown on this list have been evaluated with a specific set of shut-off valves as an integral part of the assembly. The specific shut-off valves are coded by a parenthetic code shown below the model designation. This coding of shut-off valves is defined below. Other shut-off valves having similar performance characteristics, as flow tested on the assembly, to permit the assembly to meet the Specifications are shown immediately after the original evaluation shut-off valves. The use of any other shut-off valves invalidates the Approval. Assemblies listed as "only spare parts available," designated by the '*' do not include the shut-off valve designation.

Identification of shut-off valves:

(a) American Figure 1 - QT
(b) American Figure 17 - NRS
(c) American Figure 37 - OSY
(d) Apollo Series 7B - QT
(e) AVK Series 25 - NRS
(f) AVK Series 23 - OSY
(g) Clow R/W F6102 - NRS
(h) Clow R/W F6136 - OSY
(i) Fortune Figure 620 - QT
private labeled as:
Ames
Buckner
Febco
Flomatic
Hersey
Wilkins
(j) Kennedy Ken Seal I-NRS
(k) Kennedy Ken Seal I - OSY
(l) Kennedy Ken Seal II - NRS
(m) Kennedy Ken Seal II - OSY
(n) Lee Brass - QT
(o) Watts 405 - RW
(p) Watts 408 -OSY
(q) Mueller R/W HP NRS
(r) Mueller R/W HP OSY
(s) Toro/Orion Integral Ball Valve - QT
(t) Waterous Series 500 - NRS
(u) Waterous Series 500 - OSY
(v) Watts Figure FBV (& FVB-E) - QT
(w) Watts G4000FDA - QT
(x) Watts Series 6080 (& 6080 - E) - QT
(y) Matco-Norca 10RW-NRS
(z) Matco-Norca 105U-OSY
(aa) American Flow Control Series 2500-NRS
(bb) American Flow Control Series 2500-OSY
(cc) M&H MODEL 4067-02 NRS
(dd) M&H MODEL 4068-02 OSY
(ee) Stockham Model G - 610 - OSY
(ff) Febco Series 620-QT
(gg) Fortune Figure 620U-QT
(hh) Watts Figure S-FBV (E) - QT
(ii) Mueller Model A2360-NRS
(jj) Febco Series 621 - QT
(kk) Febco Series 620U - Qt
(ll) Mueller Model R2360 - OSY
(mm) ConbracoSeriesIBVE-125-QT
(nn) Kennedy Ken Seal II Post Indicator
(oo) Febco Series 622-QT
(pp) Clow Series F6015-NRS
(qq) Clow Series F6138-OSY
(rr) Apollo Series 7B-308-01
(ss) Clow Series F6104-NRS
(tt) Clow Series F6137-OSY
(uu) Apollo Series 7H-QT
(v v) Clow R/W F6136-OSY PI/TV
(ww) Clow R/W F6138-OSY PI/TV
(xx) FEBCO Series 622U QT

Reduced Pressure Principle Assemblies

Ames

4000 B - ½",¾",1",1¼",1½",2"
(x,v)
4000 BM3 – ¾" (v,x)
4000 RP- 4", 6", 8", 10"
(e,f,g,h,t,l,m,u,cc,dd)
4000 SS- 2½", 3", 4", 6"
(e,f,g,h,t,l,m,u,cc,dd)
4000 CIV – 2½",3",4",6",8",10"
(o,g,h,l,m,p,t,u,ee)

Buckner

Ä 24000/25 - ¾" (i)
Ä 24001/25 - 1" (i)
Ä 24002/25 - 1¼" (i)
Ä 24003/25 - 1½" (i)
Ä 24004/25 - 2" (i)

Cla-Val

RP-2 - ¾", 1", 1¼",
1½", (n)
RP-4 - 2" (n), 2½" 3",
4", 6", 8", 10" (g)
* RP-4V - 4" (g)
RP6LW - ¾",1",1¼",1½",2"
(i)
RP6VW - ¾ ",1",1½",2" (i)
RP7LW - 2½",3",4",6",8",10"
(e,l,t)
RP7LY - 2½",3",4",6",8",10"
(f,m,u)
RP8LW,RP8LY,RP8NW,RP8NY -
2½",3",4",6",8",10"
(e,l,t)
RP8VW, RP8VY
2½",3",4",6",8",10" (e,f,l,m,t,u)

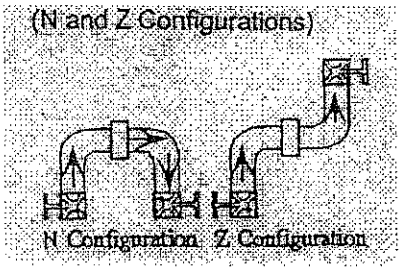

Conbraco

40-201-02/A2/A2S - ¼" (d)
40-202-02/A2/A2S - _" (d)
40-203-02/A2/A2S - ½" (d)
40-204-A2/02 - ¾ " (d)
40-205-A2/02 - 1" (d)
40-206-A2/02 - 1¼" (d)
40-207-A2/02 - 1½" (d)
40-208-A2/A4/02 - 2" (d)
**40-209-02/03 - 2½"
**40-200-02/03 - 3"
**40-20A-02/03 - 4"
**40-20C-02/03 - 6"

Conbraco (Con't)

**40-20E-02/03 - 8"
**40-20G-02/03 - 10"
40-204-A2V/A2Z- ¾" (d)
40-205-A2V/A2Z- 1" (d)
40-206-A2V/A2Z- 1¼" (d)
40-207-A2V/A2Z-1½" (d)
40-208-A2V/A2Z-2" (d)

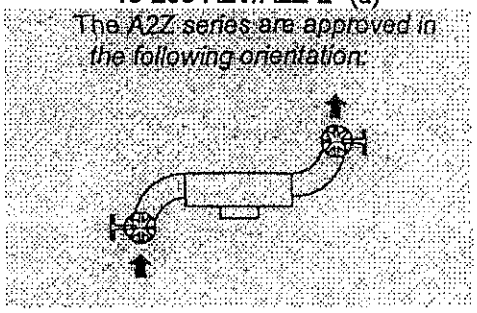

Febco

* 825 - 2½", 3", 4",
6", 8", 10"
* 825 D - 2½", 3",
4", 6", 8", 10"
825 YD - 2½", 3",
4", 6", 8", 10"
(e,l,t)
825Y - ¾",1",1¼",1½",2"
(i,ff)
825YA - ¾",1",1½",2" (i,ff)
825YR, YAR - ¾",1",1½",2"
(i,ff)
* 835B - ¾",1",1½",2"
845 - ¾", 1" (i,ff)
860 - ½",¾",1",1¼",1½",2" (ff)
860U - ½",¾",1",1¼", 1½",2" (kk)
860 - 2½",3",4",6",8"
(e,f,l,m,t,u)
880 - 2½",3",4",6",8",10"
(e,f,l,m,t,u,)
880V - 2½",3",4",6",8",10"
(e,f,l,m,t,u)

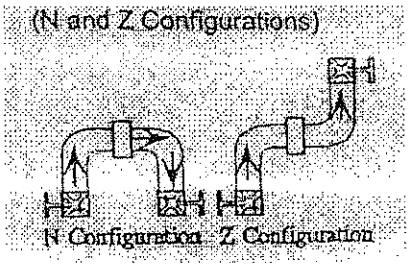

Flomatic

RPZ/RPZE - ¾",1",1½", 2, (i)
- 2½", 3", 4", 6" (g,h)
RPZII/RPZIIE - ½", ¾" (i)

 Reduced Pressure Principle (con't)

Hersey/ Grinnell (Beeco)
- 6CM - 2½", 3", 4", 6" 8", 10" (t, b, q)
- 6CM-Bronze - 2½", 3", 4",6"(t,b,q)
- FRP-2 - ¾", 1", 1¼", 2" (i)
- FRP-2- 1½" (a,b,c,d,e)

Mueller
- * H-9506 - 4",6",8",10"

Orion (Toro)
- 80-0069 - 1½" (s)
- BRP - ¾" (s), 1" (s), 3" (b,c), 4" (b,c)
- 9-2929 - 2" (s)

Rain Bird
- * RP-QT-075 - ¾"
- * RP-QT-100 - 1"
- * RP-QT-150 - 1½"
- * RP-QT-200 - 2"
- * RPA-075-R - ¾"
- * RPA-100-R - 1"
- * RPA-125-R - 1¼"
- * RPA-150-R - 1½"
- * RPA-200-R - 2"
- * RPA-250-R - 2½"
- * RPA-300-R - 3"
- * RPA-400-R - 4"
- * RPA-600-R - 6"
- * RPA-800-R - 8"
- * RPA-1000-R - 10"

Richwell - see Wilkins

Toro - see Orion

Watts
- 009 – ½",¼",¾",1",1¼", 1½",2",2½"Ñ,3"Ñ,4",6" (v,x)
- SS009- ¼",3/8",½", ¾", 1" (hh)
- 909 - ¾",1",1¼",1½",2" (v,x) - 2½",3",4",6",8",10" (o,g,h,p,t,u) [¾",1" approved vertical]

options:
- BB - Bronze body
- FDA - Epoxy coatings
- HW - stainless steel check modules for hot water
- M1/M2/M3 - Indicates model upgrade
- N - RW in 2½" and 3" only (o,g,t)
- PC - Internal polymer coating
- QT - quarter turn ball valves
- RW - Resilient wedge shutoff valves
- SS - Stainless steel internal parts
- U - Union connections

Watts (con't)
- 990-QT-FDA - 4", 8" (w)
- 990-RW - 4"(o,g,t)
- 990 - 8" (g,h,o,p,t,u)
- 992 - 10" (g,h,o,p,t,u)
- 992 RW - 4" (o,g,t)
- 994 - 2½",3",4",6" (e,f,g,h,l,m,o,p,t,u,cc,dd)
- 995 – ½", ¾", 1", 1¼", 1½"

All models of U009 are approved in the configurations shown below:

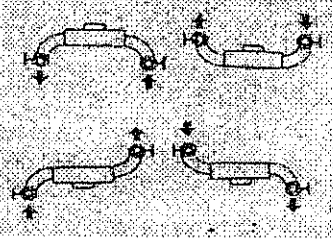

Wilkins (Richwell)
- 375/375G/375PI–2½",3",4",6" (g) (pp for G)(qq, ww for PI)
- 475/475G–2½",3",4",6" (pp) (ss for G)
- 475V – 2½",3",4",6" (pp)
- * 575 - ¾", 1"
- 575 - 1¼", 1½", 2" (MOD III) (i)
- 575 - 2½",3",4",6" (g,e,y,t)
- 575A - ¾", 1" (i)
- 575 - M8" (4"x4"x8" Manifold) (g,e,y,t)
- 575 - M10" (6"x6"x10" Manifold) (g,e,y,t)
- 975 - ¾",1",1¼",1½",2" (i)
- 975 - 2½", 3", 4", 6" 8", 10" (g,e,y,t)
- 975A - ¾",1",1¼",1½",2" (i,m)
- 975MS/BMS-2½",3",4",6",8",10" (e,f,g,h,t,u,y,z)
- 975XL, XLU (except 1¼"),XLSEU, (except ¼", ½"), XLBMS -¼",½",¾",1",¼",1½", 2" (i)
- 975XLV - ¾",1" (i)

The 975XLV,XLSE, and XLSEU are approved in the orientations shown:

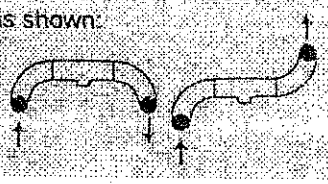

* - Only spare parts available
** - A2 indicates replaceable seats
- 02 indicates non-rising stem shut-off valve (t), b, e, l
- 03 indicates OS & Y shut-off valve (u),(c),(m)

A2T- indicates replaceable seats,rising stem shut-off, threaded end

Ä - When followed by: /25, indicates replaceable check valve seats, otherwise, they are non-replaceable

Double Check Valve Assemblies

Ames
* DC - 4", 6", 8"
2000 B - ½",¾",1",1¼",1½",2"
(v,x) (Vertical up)
2000 BM3 – ¾" (v,x) (vertical up)
2000-CIV - 4",6",8",10"
(g,h,l,m,o,p,t,u,ee)
Vertical up
* 2000-DC - 10"
2000-G-DC - 10"
2000-DCA - 4",6",8"
2000-G-DCA - 4",6",8"
2000-SS - ¾",1",1¼",1½",2"(i)
2000-SS - 2½",3",4",6", 8",10"
2000-SS - M - 4",6"
2000-SE -2½",6",8"
All assemblies larger than 2½" are approved with the following shutoff valves (e,f,g,h,l,m,t,u,cc,dd)

Beeco - see Hersey/Grinnell

Buckner
Ä 24100/25 - ¾" (i)
Ä 24101/25 - 1" (i)
Ä 24102/25 - 1¼" (i)
Ä 24103/25 - 1½" (i)
Ä 24104/25 - 2" (i)

Cla-Val
D2 - ¾",1",1¼",1½" (n)
D4 - 2", 2½", 3", 4",
6", 8", 10" (g)
DC6LB - ¾" (i) (Vertical up)
DC6LW - ¾",1",1½",2" (i)
DC7LW - 2½",3",4",6",8",10"
(e,l,t)
DC7LY - 2½",3",4",6",8",10"
(f,m,u)
DC8LW,DC8LY- 4",6", (e,l,t)
(Vertical up)
DC8LW,DC8LY - 8" (e,l,t)
DC8NW,DC8NY -2½",3",4",6",
8",10" (e,l,t)
DC8VW - 2½",3",4",6",8",10"(e,l,t)
(DC8VW,DC8VY-2½",3",4",6",8",
and 10" approved for N and Z
configurations)

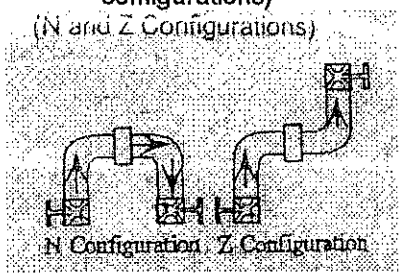

Conbraco
DC and DCU Series – ½",2½",3",4",6"
(d,l,m) (vertical up inlet, vertical down outlet)
**40-103-02 - ½" (d)
**40-104-A2/02/A2T/99T - ¾"(d)
**40-105-A2/02/A2T/99T- 1" (d)
**40-106-A2/02/A2T/99T- 1¼" (d)
**40-107-A2/02/A2T/99T- 1½" (d)

Conbraco (con't)
**40-108-A2/02/A2T/99T- 2" (d)
**40-109-02/03/05 - 2½"
**40-100-02/03/05 - 3"
**40-10A-02/03/05/06 - 4" (m,oo)
**40-10C-02/03/05/06 - 6"
**40-10E-02/03/06 - 8"
**40-10G-02/03/06 - 10"

FEBCO
*805 - ¾",1",1½",2",3",4"
805Y - ¾",1",1½",2" (i,ff,jj)
*805Y - 2½",3",4",6",8",10"
805YB - ¾" (i,ff,jj) (Vertical up)
805YR - ¾", 1" (i,ff,jj)
805YD - 2½",3",4",6",8",10"
(e,f,l,m,t,u)
850 - ½",¾",1",1¼",1½",2" (ff,jj,oo)
(Vertical up and down)
850U - ½",¾",1",1¼",1½",2" (kk)
(Vertical up)
850 - 2½",3",4",6",8",10"
(e,l,t) (Vertical up)
870 - 2½",3",4",6",8",10"
(e,f,l,m,t,u)
(870-2½",3",4",6",8",10"
approved for N and Z
configuration)

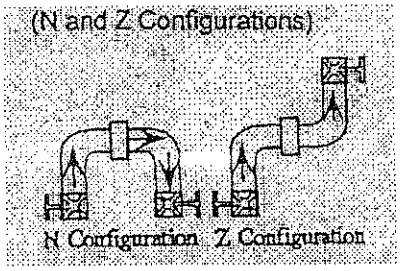

Flomatic
DCV - ¾", 1", 1½", 2" (i)
- 2½", 3", 4", 6" (g,h)

Grinnell Model B2 - see Kennedy 1373

Hersey/
Grinnell
(Beeco)
FDC - ¾", 1", 1½",2" (i)
HDC - ¾",1",1½",2" (i)
#2 - 3", 4", 6", 8",10" (t, b, q)
*E-1 - 4", 6"

Kennedy
1373 - 4", 6", 8", 10"
(m, j, k, l)

Mueller
*H-9505 - 4",6",8",10"

 Double Check Valves (con't)

Neptune - see Wilkins

Orion (Toro)
- 80-0070 - 1½" (s)
- 9-2930 - 2" (s)
- BDC - ¾", 1" (s)
- BDC - 3", 4" (b),(c)

Rain Bird
- *DCA-075-R - ¾"
- *DCA-100-R - 1"
- *DCA-150-R - 1½"
- *DCA-200-R - 2"
- *DCA-250-R - 2½"
- *DCA-300-R - 3"
- *DCA-400-R - 4"
- *DCA-600-R - 6"
- *DCA-800-R - 8"
- *DCA-1000-R - 10"
- *DC-QT-075 - ¾"
- *DC-QT-100 - 1"
- *DC-QT-150 - 1½"
- *DC-QT-200 - 2"

Richwell - see Wilkins

SMR - see Wilkins

Toro - see Orion

Viking
- *A-1 - 4", 6", 8", 10"

Watts
- *700 - 2½", 3"
- 007 - ½",¾",1",1½",2", 2½"Ñ,3"Ñ (v,x) (½",¾",1",1¼",1½",2",2½",3" Vertical up)
- 709 - ¾",1",1½",2" (v,x) - 2½", 3", 4", 6", 8", 10" (o,g,h,p,t,u) (4",6",8",10" Vertical up)

Watts options:
- BB - Bronze body
- FDA - Epoxy coatings
- HW - stainless steel check modules for hot water
- M1/M2 - Indicates model upgrade
- N - RW in 2½" and 3" only (o,g,t)
- PC - Internal polymer coating
- QT - quarter turn ball valves
- RW - Resilient wedge shut off valves
- SS - Stainless steel internal parts
- U - Union connections

Watts (con't)
- 770 - RW - 4" (o, g, t)
- 770 - QT FDA - 4", 8" (w)
- 770-8" (o, g, h, p, t, u)
- 772 - RW - 4" (o, g, t)
- 772-10" (o, g, h, p, t, u)
- 774 -¾",1",1¼",1½",2" (i)
- 774 -2½",3",4",6",8",10" (e,f,g,h,l,m,t,u,cc,dd)
- 774 X-2½",6",8" (e,f,g,h,l;m,t,u,cc,dd)
- 775QT – ½",¾",1",1¼",1½",2" (v,x) (Vertical up)

All models of U009 are approved in the configurations shown below:

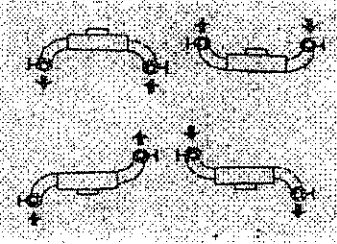

Wilkins (Neptune/ Richwell/ SMR)
- 350/350PI – 2½",3",4",6",8",10" (g,e,t,y,h,f,u,z)(vertical up)
- 350G/GPI – 4",6",8" (pp) (vertical up)
- 450–2½",3",4" (pp) (v-up inlet,v-dn outlet)
- *550 - ¾",1"
- 550A - ¾",1" (i)
- 550 - 1¼", 1½", 2" (i)
- 550 - 2½",3",4",6" (g, e, t, y)
- 550 - M8" (4"x4"x8" Manifold) (g, e, o, t)
- 950 - ¾",1",1¼",1½",2" (i)
- 950 - 2½",3",4",6",8",10" (g,e,t,y) (4",6",8" Vertical up)
- 950 A- ¾",1",1¼",1½",2" (i)
- 950 XL- ¾",1",1¼",1½",2" (i) (¾ Vertical up)
- 950XLD – ¾" (i)
- 950 XLU- ¾",1",1½",2" (i)
- 950 XLT- ¾",1",1¼",1½",2" (i)

* - Only spare parts available
** - A2 indicates replaceable seats
- 02 indicates non-rising stem shut-off valve (t), b, e, l
- 03 indicates OS & Y shut-off valve (u),(c),(m)

A2T- indicates replaceable seats, rising stem shut-off, threaded end
Ä - When followed by: /25, indicates replaceable check valve seats, otherwise, they are non-replaceable
99T - Vertical test cocks and shut offs and replaceable seats

Double Check Detector Assemblies and Reduced Pressure Principle Detector Assemblies

WARNING: The double check detector assemblies and reduced pressure principle detector assemblies shown have been evaluated with a specific meter as the detector element of the assembly. That specific meter is coded by a parenthetic letter shown immediately after the size designation. This coding of meters is shown in this section. Other meters having similar performance characteristics to permit the assembly to meet the specifications are shown immediately after the original evaluation meter. The use of any other meter or modified bypass piping invalidates the approval.

Most of the approved assemblies utilize a line-size assembly which is not a standard or stock approved assembly. Increased loads are required in these line-size units to allow the assembly to accurately record low flow rates in the bypass meter. Therefore, various 'off the shelf' components can not be assembled and expected to perform satisfactorily.

Identification of meters evaluated and approved for use in these assemblies:

A. Hersey Model F-F 5/8"x3/4"
B. Carlon 5/8"x3/4"
C. Dande' Model D-3 5/8"x3/4"
D. Gamon-Calmet 5/8"
E. Hays Acumeter 5/8"x3/4"
F. Arad 5/8"x3/4" (Master Meter)
G. Schlumberger 5/8"x3/4" Model MBRF
H. Rockwell (Sensus) SR-II 5/8"x3/4"
I. Hersey Model 430 - 5/8"
J. ABB Model C700 5/8"x3/4"
K. Precision 5/8"
L. Neptune Trident 8 - 5/8"
M. Neptune T-10 5/8"
N. Badger Model 25 3/4"
O. Hersey Model MVR-30 3/4"
P. Neptune T-10 1"
Q. Neptune T-10 1½"

Double Check Detector Assemblies

Ames

* DCDC - 4",6",8" (K), A,B,C,D,E,F,G,H,I,J,L,M, N,O,P,Q

3000 CIV - 4",6",8",10" (N) A,B,C,D,E,F,G,H,I,J,K,L, M,O (h,p,u,ee) vertical up

3000 DCDC - 10" (M), O, B,C,D,E,F,G,H,I,J,K,L,N, P,Q,(u,m)

3000-G-DCDC - 10" (M), B,C,D,E,F,G,H,I,J,K,L,N, O,P,Q (u,m)

3000 DCDA - 4", 6", 8" (M), B,C,D,E,F,G,H,I,J,K,L,N, O,P,Q (u,m)

3000-G-DCDA - 4", 6", 8" (M), B,C,D,E,F,G,H,I,J,K,L,N, O,P,Q (u,m)

3000-SS - 2½",3",4",6",8",10" (M),B,C,D,E,F,G,H,I,J,K, L ,N,O (u)

3000-SE - 2½",6",8" (M), B,C,D,E,F,G,H,I,J,K,L,N,O (u)

Ames (con't) 3000-SS-A-6" (M) A,B,C,D,E,F, G,H,I,J,K,L,N,O,P,Q, (u,l,m,t)

3000-SE-A-8" A,B,C,D,E,F,G,H, I,J,K,L,O,P,Q (u,l,m,t)

3000-SS-M-4" (P) (u, l, m, t)
3000-SS-M-6" (Q) (u, l, m, t)

Watts 007 M2 QT - ¾" or Ames 2000B - ½" DC
Bypass on all Ames models

Cla-Val

Model 16 - 4", 6", 8", 10" (D),E,F,G,H,I,J, K,L,N,O,P,Q

DD7LY - 4",6",8",10" (F) A,B,C,D,E,G,H,I,J,K, L,M,N,O,P,Q (f,m,u)

DD7LY - 3" (M) B,C,D,E,F, G,H,I,J,K,L,M,N,O,P,Q (f,m,u)

DD8LY - 4",6",8" (M) B,C,D,E, F,G,H,I,J,K,L,M,N,O,P,Q (4", 6" Vertical up) (f,m,u)

DD8NY - 2½",3",4",6",8",10"(M) B,C,D,E,F,G,H,I,J,K,L,M,

 Double Check Detector Assemblies (con't)

Cla-Val (con't)

DD8VY -2½",3",4",6",8",10" (M)
D,E,F,G,H,I,J,K,L,M,N,O,P,Q (f,m,u)
(approved for N and Z Configurations)
(DC6LB- ¾" On all bypass lines)

Conbraco

**40-600-C3 and E3- 3"
**40-60A-C3 and E3- 4"
**40-60C-C3 and E3- 6"
**40-60E-C3 and E3- 8"
**40-60G-C3 and E3- 10" (M)
A,B,C,D,E,F,G,H,I,J,K,L,N,O,P,Q (c,m u)
(40-104-02 - ¾" on all bypass lines)

DCDA and DCDAU Series – 2½",3",4",6"
(M) E,F,G,H,I,J,K,L,M,N,O,P,Q (V-UP inlet, V-DOWN outlet) Model ½ DC on bypass

Febco

2 1/2 DCDA – 2 ½"
3 DCDA – 3"
4 DCDA – 4"
6 DCDA – 6"
(M),E,F,G,H,I,J,K,L,N,O,P
All the above: (vertical up) (l,m)
(1/2 DC – ½" bypass)

* Model 806 - 4",6",8",10"(F),
A,B,C,D,E,F,G,H,I,J,K,L,M,N,O

Model 806 Type YD - 3" (M),B,C,
D,E,F,G,H,I,J,K,L,N,O (f,m,u)

Model 806 Type YD -4",6",8",10"
(F),A,B,C,D,E,G,H,I,J,K,L,
M,N,O (f, m, u)

Model 856 - 2½",3",4",6",8"
(Vertical up) (M),B,C,D,E,
F,G,H,I,J,K,L,N,O,P,Q (f, m, u)

Model 876 - 2½",3",4",6",8",10"
(Vertical up) (M) B,C,D,E,
F,G,H,I,J,K,L,M,N,O,P,Q (f,m,u)
(805 YB- ¾" on all bypass lines)

Hersey/Grinnell

Model DDC-II -3" (O) A,B,C,D,
C,D,E,F,G,H,I,J,K,L,M,N (u,c,r,i,l)
(FDC - ¾" Bypass)

Model DDC-II - 4",6",8" E,F,G,H,I,J,K,L,M,N
(u,c,r)(FDC - ¾" Bypass)

Model DDC-II – 10" (O),
B,C,D,E,F,G,H,I,J,K,L,M,N (u,c,r,i,l)
(FDC- ¾" bypass)

Watts

Model 007DCDA-2"(H),A,B,C,D,
E,F,G,I,J,K,L,M,N,O,P,Q(bb)
(007QT - ½" Bypass)
(Vertical up)

Model 007DCDA - 2½",3" (H)
D,E, F,G,I,J,K,L,M,N,O (p,h,u)
(2½" vertical up)
(007 M1QT - ¾" Bypass)

Model 709DCDA - 3" (N),B,C,
D,E,F,G,H,I,J,K,L,M,O
(p, h, u)
(709 QT - ¾" Bypass)

Model 709DCDA - 4",6",8",10"
(N),A,B,C,D,E,F,G,H,I,J,K,L,M,
O (p,h,u) (all Vertical up)
(709 QT - ¾" Bypass)

Model 709DCDA - 10" (N),E,F,G,
H,I,J,K,L,M,O (p,h,u)
(709 QT - ¾" Bypass)

Model 770DCDA - 4" (H),A,B,C,D,
E,F,G,I,J,K,L,M,N,O (p,h,u)
(007 M1QT - ¾" Bypass)

Model 770DCDA (NRS RW &
OSY RW) - 8" (H),D,E,F,G,H,I,
J,K,L,M,N,O (p,h,u)
(007 M1QT - ¾" Bypass)

Model 772DCDA (NRS RW &
OSY RW) - 10" (H),A,B,C,
B,C,D,E,F,G,I,J, K, L, M, N,O
(p,h,u) (007 M1QT-¾"Bypass)

Model 772DCDA - 4" (H),
A,B,C,D,E,F,G,I,J,K,L,M,N,O
(p, h, u) (007 M1QT - ¾" Bypass)

Model 774DCDA -2½",3",4",6",8",10"
(M)A,B,C,D,E,F,G,H,I,J,K,L,N,
O,P,Q (e,f,g,h,l,m,t,u, cc,dd)
(007M1QT or 2000B -¾" Bypass)

Model 774XDCDA -2½"(M)N,O,P,Q
Model 774XDCDA -6",8" (M)
A,B,C,D,E,F,G,H,I,J,K,L,N,O,P,Q
(e,f,g,h,l,m,t,u,cc,dd)
(007M1QT - ¾" Bypass)

 Double Check Detector Assemblies (con't)

Wilkins

Model 350DA – 2½",3",4",6",8",10"(M)
A,B,C,D,E,F,G,H,I,J,K,L,N,O,P
(h,f,m,u,z)
(950XLD – ¾" bypass)

Model DCDA - 2½", 3"(M)
B,C,D,E,F,G,H,I,J,K,L,N,O (h,f,z,u)
(550A - ¾" Bypass)

Model 450DA – 4"(M),
A,B,C,D,E,F,G,H,I,J,K,L,N,O,P
(v up-inlet,v dn- outlet) (qq)
(950XL – ¾" bypass)

Model 350DAG – 4", 6"(M),A,B,C,D,E,
F,G,H,I,J,K,L,N,O,P (vertical up)
(qq) (950XLD – ¾" bypass)

Model 350DAGPI – 4", 6" (M), A,B,C,D,E,F,
G,H,I,J.K.L.N.O.P.Q (qq, ww)
(HORIZONTAL and VERTICAL UP)
950XL – ¾" bypass

Wilkins (con't)

Model 350DAPI – 4", 6", (M),A,B,C,D,E,F,
G,H,I,J,K,L,N,O,P,Q (h,v)
950XL – ¾" bypass

Model 950DAG – 4",6"(M),A,B,C,D,E,
F,G,H,I,J,K,L,N,O,P(qq) (vertical up)
950XL – ¾"bypass

Model DCDA - 4", 6" (M),
A,B,C,D,E,F,G,H,I,J,K,L,N,O
(h,f,z,u) (550A - ¾" Bypass)

Model 950 DA - 2½",3",4",6",8",10" (M),
A,B,C,D,E,F,G,H,I,J,K,L,N,O (h,f,z,u)
950- ¾" Bypass)
(2½" - 8" Vertical up)

Reduced Pressure Principle Detector Assemblies

Ames

Model 5000 - 4", 10" (M),A,B,C,D,E,
F,G,H,I,J,K,L,N,O (u)
(40-204-02- ¾" Bypass)

Model 5000 - 6",8" (K),A,B,C,D,E,
F,G,H,I,J,L,M,N,O (u,m)
(40-204-02- ¾" Bypass)

Model 5000CIV – 2½",3",4",6",8",10" (H)
B,C,D,E,F,G,I,J,K,L,M,N,O,P
(p,h,m,u,ee) (Watts 909QT- ¾" bypass)

Cla-Val

Model 18 - 10" (H),A,B,C,D,E,F,G,I,J,K,L,M,N,O
(h) (RP2 - ¾" Bypass)
RD7LY-2½",3",4",6",8",10" (M),B,C,D,E,F,
G,H,I,J,K,L,M,N,O,P,Q (f,m,u)
(RP6LW - ¾" Bypass)

Conbraco

**40-700-C3 and E3- 3"
**40-70A-C3 and E3- 4"
**40-70C-C3 and E3- 6"
**40-70E-C3 and E3- 8"
**40-70G-C3 and E3-10"
(M),A,B,C,D,E,F,G,H,I,J,K,L,N,O
(c,m,u) (40-204-02 - ¾" Bypass)

FEBCO

826 YD - 2½",3",4",6",8",10" (M)B,C,D,
E,F,G,H,I,J,K,L,N,O (f,m,u)
(826YD - ¾" Bypass)

Hersey/ Grinnell

Model 6CMDA -4",6", 8", 10" (M),
B,C,D,E,F,G,H,I,J,K,L,O (u, c, r)
(FRP-11 - 1½" Bypass)

Watts

909 RPDA - 3",4",6",8",10" (N) B,C,D,E,F,
G,H,I,J,K,L,M,O (p, h, u)
(909 QT - ¾" Bypass)
990 RPDA - 4"(H),A,B,C,D,E,F,G,I,J,K,L,M,N,O
(p,h, u)(009 QT - ¾" Bypass)
990 NRS RW & OSY RW - 8"(H),D,E,F,G,
I,J,K,L,M,N,O
OSY - (p, h, u) NRS - (o, g, t)
(009 QT - ¾"Bypass)
992 NRS RW & OSY RW - 10" (H),
A,B,C,D,E,F,G,I,J,K,L,M,N,O
OSY-(p, h, u) /NRS-(o, g, t)
(009 QT - ¾" Bypass)

Wilkins

375 DA – 6" (N) C,D,E,F,G,H,I,J,K,L,M,O,P,Q
(f,h,m,u,z) 975XL – ¾" bypass
375 DAG – 4" (M)C,D,E,F,G,H,I,J,K,L,N,O,P,Q
(qq) 975 XLD – ¾" bypass
375 DAGPI – 4" (M) C,D,E,F,G,H,I,J,K,L,N,
O,P,Q (qq SOV #1) (ww SOV #2)
975XLD – ¾" bypass
375 DAPI – 4" (M) C,D,E,F,G,H,I,J,K,L,N,O,P,
Q (h SOV #1) (vv SOV #2)
975XLD – ¾" bypass
475 DA – 4",6" (N)F,G,H,I,J,K,L,M,O,P,Q
(V up – Inlet, V down – Outlet) (pp)
975XLD – ¾" bypass
975 DA 2½",3",4",6",8",10"(M),A,B,C,D,
E,F,G,H,I,J,K,L,N,O, (h, f)
(975 RP - ¾" Bypass)
975 DAG – 4",6" (M),B,C,D,E,F,G,H,I,J,K,L,N,
O,P (qq) (975 RP – ¾" bypass)

Should you have any questions concerning this list, please contact Michael Logston, 573/751-4594, Public Drinking Water Program, P.O. Box 176, Jefferson City, Missouri 65102

City of Belton

Section 4

RULES OF
2000 INTERNATIONAL PLUMBING CODE
(SECTION 608)
2000 INTERNATIONAL RESIDENTIAL CODE
CHAPTERS 25 & 29

(See attached pages)

607.2.1 Piping insulation. Piping in required return circulation systems shall be insulated to provide a thermal resistance, R, excluding film resistances, of

$$R = \left[\frac{t_i - t_o}{25}(\text{hr.})(\text{ft.}^2)^\circ\text{F}\right] / \text{Btu} \qquad (6\text{-}1)$$

For SI: $R = \left[t_i - t_o(0.0304)\ \text{K} \cdot \text{m}^2\right] / \text{W}$

where:

$t_i - t_o$ = the design temperature differential between the water in the pipe and the surrounding air in degrees Fahrenheit.

Exception: Pipe insulation is not required where $t_i - t_o$ is 25°F (14°C) or less.

607.2.2 Pump operation. Where a circulating pump is installed on a return circulation hot water system, the pump shall be arranged to shut off automatically or to allow manual shut off when the hot water system is not in operation.

607.3 Thermal expansion control. A means of controlling increased pressure caused by thermal expansion shall be provided where required in accordance with Sections 607.3.1 and 607.3.2.

607.3.1 Pressure-reducing valve. For water service system sizes up to and including 2 inches (51 mm), a device for controlling pressure shall be installed where, because of thermal expansion, the pressure on the downstream side of a pressure-reducing valve exceeds the main supply pressure. A pressure-reducing valve with an integral bypass check valve or other device shall be installed to satisfy this requirement.

607.3.2 Backflow prevention device or check valve. Where a backflow prevention device, check valve or other device is installed on a water supply system utilizing storage water heating equipment such that thermal expansion causes an increase in pressure, a device for controlling pressure shall be installed.

607.4 Hot water supply to fixtures. The hot water supply to any fixture shall be installed on the left side of the fixture.

SECTION 608
PROTECTION OF POTABLE WATER SUPPLY

608.1 General. A potable water supply system shall be designed, installed and maintained in such a manner so as to prevent contamination from nonpotable liquids, solids or gases being introduced into the potable water supply through cross-connections or any other piping connections to the system. Backflow preventer applications shall conform to Table 608.1, except as specifically stated in Sections 608.2 through 608.16.9.

608.2 Plumbing fixtures. The supply lines or fittings for every plumbing fixture shall be installed so as to prevent backflow.

608.3 Devices, appurtenances, appliances and apparatus. All devices, appurtenances, appliances and apparatus intended to serve some special function, such as sterilization, distillation, processing, cooling, or storage of ice or foods, and that connect to the water supply system, shall be provided with protection against backflow and contamination of the water supply system. Water pumps, filters, softeners, tanks and all other appliances and devices that handle or treat potable water shall be protected against contamination.

608.3.1 Special equipment, water supply protection. The water supply for hospital fixtures shall be protected against backflow with a reduced pressure principle backflow preventer, an atmospheric or spill-proof vacuum breaker, or an air gap. Vacuum breakers for bedpan washer hoses shall not be located less than 5 feet (1524 mm) above the floor. Vacuum breakers for hose connections in health care or laboratory areas shall not be less than 6 feet (1829 mm) above the floor.

608.4 Water service piping. Water service piping shall be protected in accordance with Sections 603.2 and 603.2.1.

608.5 Chemicals and other substances. Chemicals and other substances that produce either toxic conditions, taste, odor or discoloration in a potable water system shall not be introduced into, or utilized in, such systems.

608.6 Cross-connection control. Cross connections shall be prohibited, except where approved protective devices are installed.

608.6.1 Private water supplies. Cross connections between a private water supply and a potable public supply shall be prohibited.

608.7 Stop-and-waste valves prohibited. Combination stop-and-waste valves or cocks shall not be installed underground.

TABLE 608.1
APPLICATION FOR BACKFLOW PREVENTERS

DEVICE	DEGREE OF HAZARD[a]	APPLICATION[b]	APPLICABLE STANDARDS
Air gap	High or low hazard	Backsiphonage or backpressure	ASME A112.1.2
Antisiphon-type water closet flush tank ball cock	Low hazard	Backsiphonage only	ASSE 1002 CSA CAN/ B125
Barometric loop	High or low hazard	Backsiphonage only	(See Section 608.13.4)
Reduced pressure principle backflow preventer	High or low hazard	Backpressure or backsiphonage Sizes $^3/_8$" - 16"	ASSE 1013 AWWA C511 CSA CAN/CSA-B64.4
Reduced pressure detector assembly backflow preventer	High or low hazard	Backsiphonage or backpressure (Fire sprinkler systems)	ASSE 1047
Double check backflow prevention assembly	Low hazard	Backpressure or backsiphonage Sizes $^3/_8$" - 16"	ASSE 1015 AWWA C510
Double check detector assembly backflow preventer	Low hazard	Backpressure or backsiphonage (Fire sprinkler systems) Sizes $1^1/_2$" - 16"	ASSE 1048
Dual-check-valve-type backflow preventer	Low hazard	Backpressure or backsiphonage Sizes $^1/_4$" - 1"	ASSE 1024
Backflow preventer with intermediate atmospheric vents	Low hazard	Backpressure or backsiphonage Sizes $^1/_4$" - $^3/_4$"	ASSE 1012 CSA CAN/CSA-B64.3
Dual-check-valve-type backflow preventer for carbonated beverage dispensers/post mix type	Low hazard	Backpressure or backsiphonage Sizes $^1/_4$" - $^3/_8$"	ASSE 1032
Pipe-applied atmospheric-type vacuum breaker	High or low hazard	Backsiphonage only Sizes $^1/_4$" - 4"	ASSE 1001 CSA CAN/CSA-B64.1.1
Pressure vacuum breaker assembly	High or low hazard	Backsiphonage only Sizes $^1/_2$" - 2"	ASSE 1020
Hose-connection vacuum breaker	High or low hazard	Low head backpressure or backsiphonage Sizes $^1/_2$", $^3/_4$", 1"	ASSE 1011 CSA CAN/CSA-B64.2
Vacuum breaker wall hydrants, frost-resistant, automatic draining type	High or low hazard	Low head backpressure or backsiphonage Sizes $^3/_4$", 1"	ASSE 1019 CSA CAN/CSA-B64.2.2
Laboratory faucet backflow preventer	High or low hazard	Low head backpressure and backsiphonage	ASSE 1035 CSA B64.7
Hose connection backflow preventer	High or low hazard	Low head backpressure, rated working pressure backpressure or backsiphonage Sizes $^1/_2$"- 1"	ASSE 1052
Spill-proof vacuum breaker	High or low hazard	Backsiphonage only Sizes $^1/_4$"- 2"	ASSE 1056

For SI: 1 inch = 25.4 mm.

a. Low hazard—See Pollution (Section 202).
High hazard—See Contamination (Section 202).

b. See Backpressure (Section 202).
See Backpressure, Low Head (Section 202).
See Backsiphonage (Section 202).

608.8 Identification of potable and nonpotable water. In buildings where two or more water distribution systems, one potable water and the other nonpotable water, are installed, each system shall be identified either by color marking or metal tags in accordance with Sections 608.8.1 through 608.8.3, unless otherwise approved by the code official.

608.8.1 Information. Pipe identification shall include the contents of the piping system and an arrow indicating the direction of flow. Hazardous piping systems shall also contain information addressing the nature of the hazard. Pipe identification shall be repeated at maximum intervals of 25 feet (7620 mm) and at each point where the piping passes through a wall, floor or roof. Lettering shall be readily observable within the room or space the piping is located.

608.8.2 Color. The color of the pipe identification shall be discernable and consistent throughout the building.

608.8.3 Size. The size of the background color field and lettering shall comply with Table 608.8.3.

TABLE 608.8.3
SIZE OF PIPE IDENTIFICATION

PIPE DIAMETER (inches)	LENGTH OF BACKGROUND COLOR FIELD (inches)	SIZE OF LETTERS (inches)
$^3/_4$ to $1^1/_4$	8	0.5
$1^1/_2$ to 2	8	0.75
$2^1/_2$ to 6	12	1.25
8 to 10	24	2.5
over 10	32	3.5

For SI: 1 inch = 25.4 mm.

608.9 Reutilization prohibited. Water utilized for the cooling of equipment or other processes shall not be returned to the potable water system. Such water shall be discharged into a drainage system through an air gap or shall be utilized for non-potable purposes.

608.10 Reuse of piping. Piping that has been utilized for any purpose other than conveying potable water shall not be utilized for conveying potable water.

608.11 Painting of water tanks. The interior surface of a potable water tank shall not be lined, painted or repaired with any material that changes the taste, odor, color or potability of the water supply when the tank is placed in, or returned to, service.

608.12 Pumps and other appliances. Water pumps, filters, softeners, tanks and all other devices that handle or treat potable water shall be protected against contamination.

608.13 Backflow protection. Means of protection against backflow shall be provided in accordance with Sections 608.13.1 through 608.13.9.

608.13.1 Air gap. The minimum required air gap shall be measured vertically from the lowest end of a potable water outlet to the flood level rim of the fixture or receptacle into which such potable water outlet discharges.

608.13.2 Reduced pressure principle backflow preventers. Reduced pressure principle backflow preventers shall conform to ASSE 1013, AWWA C511 or CSA CAN/CSA-B64.3. Reduced pressure detector assembly backflow preventers shall conform to ASSE 1047. These devices shall be permitted to be installed where subject to continuous pressure conditions. The relief opening shall discharge by air gap and shall be prevented from being submerged.

608.13.3 Backflow preventer with intermediate atmospheric vent. Backflow preventers with intermediate atmospheric vents shall conform to ASSE 1012 or CSA CAN/CSA-B64.3. These devices shall be permitted to be installed where subject to continuous pressure conditions. The relief opening shall discharge by air gap and shall be prevented from being submerged.

608.13.4 Barometric loop. Barometric loops shall precede the point of connection and shall extend vertically to a height of 35 feet (10 668 mm). A barometric loop shall only be utilized as an atmospheric-type or pressure-type vacuum breaker.

608.13.5 Pressure-type vacuum breakers. Pressure-type vacuum breakers shall conform to ASSE 1020 and spill-proof vacuum breakers shall comply with ASSE 1056. These devices are designed for installation under continuous pressure conditions when the critical level is installed at the required height. Pressure-type vacuum breakers shall not be installed in locations where spillage could cause damage to the structure.

608.13.6 Atmospheric-type vacuum breakers. Pipe-applied atmospheric-type vacuum breakers shall conform to ASSE 1001 or CSA CAN/CSA-B64.1.1. Hose-connection vacuum breakers shall conform to ASSE 1011, ASSE 1019, ASSE 1035, ASSE 1052, CSA CAN/CSA-B64.2, CSA CAN/CSA-B64.2.2 or CSA B64.7. These devices shall operate under normal atmospheric pressure when the critical level is installed at the required height.

608.13.7 Double check-valve assemblies. Double check-valve assemblies shall conform to ASSE 1015 or AWWA C510. Double-detector check-valve assemblies shall conform to ASSE 1048. These devices shall be capable of operating under continuous pressure conditions.

608.13.8 Spill-proof vacuum breakers. Spill-proof vacuum breakers (SVB) shall conform to ASSE 1056. These devices are designed for installation under continuous-pressure conditions when the critical level is installed at the required height.

608.13.9 Chemical dispenser backflow devices. Backflow devices for chemical dispensers shall comply with ASSE 1055.

608.14 Location of backflow preventers. Access shall be provided to backflow preventers as specified by the installation instructions of the approved manufacturer.

608.14.1 Outdoor enclosures for backflow prevention devices. Outdoor enclosures for backflow prevention devices shall comply with ASSE 1060.

608.15 Protection of potable water outlets. All potable water openings and outlets shall be protected against backflow in accordance with Section 608.15.1, 608.15.2, 608.15.3, 608.15.4, 608.15.4.1, 608.15.4.2 or 608.15.4.3.

608.15.1 Protection by air gap. Openings and outlets shall be protected by an air gap between the opening and the fixture flood level rim as specified in Table 608.15.1. Openings and outlets equipped for hose connection shall be protected by means other than an air gap.

608.15.2 Protection by a reduced pressure principle backflow preventer. Openings and outlets shall be protected by a reduced pressure principle backflow preventer.

608.15.3 Protection by a backflow preventer with intermediate atmospheric vent. Openings and outlets shall be protected by a backflow preventer with an intermediate atmospheric vent.

608.15.4 Protection by a vacuum breaker. Openings and outlets shall be protected by atmospheric-type or pressure-type vacuum breakers. The critical level of the vacuum breaker shall be set a minimum of 6 inches (152 mm) above

the flood level rim of the fixture or device. Ball cocks shall be set in accordance with Section 425.4.1. Vacuum breakers shall not be installed under exhaust hoods or similar locations that will contain toxic fumes or vapors. Pipe-applied vacuum breakers shall be installed not less than 6 inches (152 mm) above the flood level rim of the fixture, receptor or device served.

TABLE 608.15.1
MINIMUM REQUIRED AIR GAPS

FIXTURE	MINIMUM AIR GAP	
	Away from a wall[a] (inches)	Close to a wall (inches)
Lavatories and other fixtures with effective opening not greater than $^1/_2$ inch in diameter	1	$1^1/_2$
Sink, laundry trays, gooseneck back faucets and other fixtures with effective openings not greater than $^3/_4$ inch in diameter	1.5	2.5
Over-rim bath fillers and other fixtures with effective openings not greater than 1 inch in diameter	2	3
Drinking water fountains, single orifice not greater than $^7/_{16}$ inch in diameter or multiple orifices with a total area of 0.150 square inch (area of circle $^7/_{16}$ inch in diameter)	1	$1^1/_2$
Effective openings greater than 1 inch	Two times the diameter of the effective opening	Three times the diameter of the effective opening

For SI: 1 inch = 25.4 mm.

a. Applicable where walls or obstructions are spaced from the nearest inside edge of the spout opening a distance greater than three times the diameter of the effective opening for a single wall, or a distance greater than four times the diameter of the effective opening for two intersecting walls.

608.15.4.1 Deck-mounted and integral vacuum breakers. Approved deck-mounted or equipment-mounted vacuum breakers and faucets with integral atmospheric or spill-proof vacuum breakers shall be installed in accordance with the manufacturer's instructions and the requirements for labeling with the critical level not less than 1 inch (25.4 mm) above the flood level rim.

608.15.4.2 Hose connections. Sillcocks, hose bibbs, wall hydrants and other openings with a hose connection shall be protected by an atmospheric-type or pressure-type vacuum breaker or a permanently attached hose connection vacuum breaker.

Exceptions:

1. This section shall not apply to water heater and boiler drain valves that are provided with hose connection threads and that are intended only for tank or vessel draining.
2. This section shall not apply to water supply valves intended for connection of clothes washing machines where backflow prevention is otherwise provided or is integral with the machine.

608.15.4.3 Fittings with hose-connected outlets. Plumbing fixture fittings with hose-connected outlets shall have backflow protection in compliance with ASME A112.18.3.

608.16 Connections to the potable water system. Connections to the potable water system shall conform to Sections 608.16.1 through 608.16.9.

608.16.1 Beverage dispensers. The water supply connection to carbonated beverage dispensers shall be protected against backflow by a double check valve with an intermediate atmospheric vent conforming to ASSE 1012 or ASSE 1022. The double check valve with an intermediate atmospheric vent device and the piping downstream therefrom shall not be affected by carbon dioxide gas. Secondary protection in the form of a dual check valve conforming to ASSE 1032 shall be installed on the beverage-dispensing equipment.

608.16.2 Connections to boilers. The potable supply to the boiler shall be equipped with a backflow preventer with an intermediate atmospheric vent complying with ASSE 1012 or CSA CAN/CSA B64.3. Where conditioning chemicals are introduced into the system, the potable water connection shall be protected by an air gap or a reduced pressure principle backflow preventer, complying with ASSE 1013, CSA CAN/CSA B64.4 or AWWA C511.

608.16.3 Heat exchangers. Heat exchangers utilizing an essentially toxic transfer fluid shall be separated from the potable water by double-wall construction. An air gap open to the atmosphere shall be provided between the two walls. Heat exchangers utilizing an essentially nontoxic transfer fluid shall be permitted to be of single-wall construction.

608.16.4 Connections to automatic fire sprinkler systems and standpipe systems. The potable water supply to automatic fire sprinkler and standpipe systems shall be protected against backflow by a double check-valve assembly or a reduced pressure principle backflow preventer.

Exceptions:

1. Where systems are installed as a portion of the water distribution system in accordance with the requirements of this code and are not provided with a fire department connection, isolation of the water supply system shall not be required.
2. Isolation of the water distribution system is not required for deluge, preaction or dry pipe systems.

608.16.4.1 Additives or nonpotable source. Where systems contain chemical additives or antifreeze, or where systems are connected to a nonpotable secondary water supply, the potable water supply shall be protected against backflow by a reduced pressure principle backflow preventer. Where chemical additives or antifreeze are added to only a portion of an automatic fire sprinkler or standpipe system, the reduced pressure principle backflow preventer shall be permitted to be located so as to isolate that portion of the system.

608.16.5 Connections to lawn irrigation systems. The potable water supply to lawn irrigation systems shall be protected against backflow by an atmospheric-type vacuum breaker, a pressure-type vacuum breaker or a reduced pressure principle backflow preventer. A valve shall not be installed downstream from an atmospheric vacuum breaker. Where chemicals are introduced into the system, the potable water supply shall be protected against backflow by a reduced pressure principle backflow preventer.

608.16.6 Connections subject to back pressure. Where a potable water connection is made to a nonpotable line, fixture, tank, vat, pump or other equipment subject to back pressure, the potable water connection shall be protected by a reduced pressure principle backflow preventer.

608.16.7 Chemical dispensers. Where chemical dispensers connect to the potable water distribution system, the water supply system shall be protected against backflow in accordance with Section 608.13.1, 608.13.2, 608.13.3, 608.13.5, 608.13.6, 608.13.8 or 608.13.9.

608.16.8 Portable cleaning equipment. Where the portable cleaning equipment connects to the water distribution system, the water supply system shall be protected against backflow in accordance with Section 608.13.1, 608.13.2, 608.13.3, 608.13.7 or 608.13.8.

608.16.9 Dental pump equipment. Where dental pumping equipment connects to the water distribution system, the water supply system shall be protected against backflow in accordance with Section 608.13.1, 608.13.5, 608.13.6 or 608.13.8.

608.17 Protection of individual water supplies. An individual water supply shall be located and constructed so as to be safeguarded against contamination in accordance with Sections 608.17.1 through 608.17.8.

608.17.1 Well locations. A potable ground water source or pump suction line shall not be located closer to potential sources of contamination than the distances shown in Table 608.17.1. In the event the underlying rock structure is limestone or fragmented shale, the local or state health department shall be consulted on well site location. The distances in Table 608.17.1 constitute minimum separation and shall be increased in areas of creviced rock or limestone, or where the direction of movement of the ground water is from sources of contamination toward the well.

TABLE 608.17.1
DISTANCE FROM SOURCES OF CONTAMINATION TO PRIVATE WATER SUPPLIES AND PUMP SUCTION LINES

SOURCE OF CONTAMINATION	DISTANCE (feet)
Barnyard	100
Farm silo	25
Pasture	100
Pumphouse floor drain of cast iron draining to ground surface	2
Seepage pits	50
Septic tank	25
Sewer	10
Subsurface disposal fields	50
Subsurface pits	50

For SI: 1 foot = 304.8 mm.

608.17.2 Elevation. Well sites shall be positively drained and shall be at higher elevations than potential sources of contamination.

608.17.3 Depth. Private potable well supplies shall not be developed from a water table less than 10 feet (3048 mm) below the ground surface.

608.17.4 Water-tight casings. Each well shall be provided with a water-tight casing to a minimum distance of 10 feet (3048 mm) below the ground surface. All casings shall extend at least 6 inches (152 mm) above the well platform. The casing shall be large enough to permit installation of a separate drop pipe. Casings shall be sealed at the bottom in an impermeable stratum or extend several feet into the water-bearing stratum.

608.17.5 Drilled or driven well casings. Drilled or driven well casings shall be of steel or other approved material. Where drilled wells extend into a rock formation, the well casing shall extend to and set firmly in the formation. The annular space between the earth and the outside of the casing shall be filled with cement grout to a minimum distance of 10 feet (3048 mm) below the ground surface. In an instance of casing to rock installation, the grout shall extend to the rock surface.

608.17.6 Dug or bored well casings. Dug or bored well casings shall be of water-tight concrete, tile, or galvanized or corrugated metal pipe to a minimum distance of 10 feet (3048 mm) below the ground surface. Where the water table is more than 10 feet (3048 mm) below the ground surface, the water-tight casing shall extend below the table surface. Well casings for dug wells or bored wells constructed with sections of concrete, tile, or galvanized or corrugated metal pipe shall be surrounded by 6 inches (152 mm) of grout poured into the hole between the outside of the casing and the ground to a minimum depth of 10 feet (3048 mm).

608.17.7 Cover. Every potable water well shall be equipped with an overlapping water-tight cover at the top of the casing well or pipe sleeve such that contaminated water or other substances are prevented from entering the well through the annular opening at the top of the well casing, wall or pipe sleeve. Covers shall extend downward at least 2 inches

(51 mm) over the outside of the well casing or wall. A dug well cover shall be provided with a pipe sleeve permitting the withdrawal of the pump suction pipe, cylinder or jet body without disturbing the cover. Where pump sections or discharge pipes enter or leave a well through the side of the casing, the circle of contact shall be water tight.

608.17.8 Drainage. All potable water wells and springs shall be constructed such that surface drainage will be diverted away from the well or spring.

SECTION 609
HEALTH CARE PLUMBING

609.1 Scope. This section shall govern those aspects of health care plumbing systems that differ from plumbing systems in other structures. Health care plumbing systems shall conform to the requirements of this section in addition to the other requirements of this code. The provisions of this section shall apply to the special devices and equipment installed and maintained in the following occupancies: nursing homes, homes for the aged, orphanages, infirmaries, first aid stations, psychiatric facilities, clinics, professional offices of dentists and doctors, mortuaries, educational facilities, surgery, dentistry, research and testing laboratories, establishments manufacturing pharmaceutical drugs and medicines, and other structures with similar apparatus and equipment classified as plumbing.

609.2 Water service. All hospitals shall have two water service pipes installed in such a manner so as to minimize the potential for an interruption of the supply of water in the event of a water main or water service pipe failure.

609.3 Hot water. Hot water shall be provided to supply all of the hospital fixture, kitchen and laundry requirements. Special fixtures and equipment shall have hot water supplied at a temperature specified by the manufacturer. The hot water system shall be installed in accordance with Section 607.

609.4 Vacuum breaker installation. Vacuum breakers shall be installed a minimum of 6 inches (152 mm) above the flood level rim of the fixture or device in accordance with Section 608. The flood level rim of hose connections shall be the maximum height at which any hose is utilized.

609.5 Prohibited water closet and clinical sink supply. Jet- or water-supplied orifices, except those supplied by the flush connections, shall not be located in or connected with a water closet bowl or clinical sink. This section shall not prohibit an approved bidet installation.

609.6 Clinical, hydrotherapeutic and radiological equipment. All clinical, hydrotherapeutic, radiological or any equipment that is supplied with water or that discharges to the waste system shall conform to the requirements of this section and Section 608.

609.7 Condensate drain trap seal. A water supply shall be provided for cleaning, flushing and resealing the condensate trap, and the trap shall discharge through an air gap in accordance with Section 608.

609.8 Valve leakage diverter. Each water sterilizer filled with water through directly connected piping shall be equipped with an approved leakage diverter or bleed line on the water supply control valve to indicate and conduct any leakage of unsterile water away from the sterile zone.

SECTION 610
DISINFECTION OF POTABLE WATER SYSTEM

610.1 General. New or repaired potable water systems shall be purged of deleterious matter and disinfected prior to utilization. The method to be followed shall be that prescribed by the health authority or water purveyor having jurisdiction or, in the absence of a prescribed method, the procedure described in either AWWA C651 or AWWA C652, or as described in this section. This requirement shall apply to "on-site" or "in-plant" fabrication of a system or to a modular portion of a system.

1. The pipe system shall be flushed with clean, potable water until dirty water does not appear at the points of outlet.
2. The system or part thereof shall be filled with a water/chlorine solution containing at least 50 parts per million (50 mg/L) of chlorine, and the system or part thereof shall be valved off and allowed to stand for 24 hours; or the system or part thereof shall be filled with a water/chlorine solution containing at least 200 parts per million (200 mg/L) of chlorine and allowed to stand for 3 hours.
3. Following the required standing time, the system shall be flushed with clean potable water until the chlorine is purged from the system.
4. The procedure shall be repeated where shown by a bacteriological examination that contamination remains present in the system.

SECTION 611
DRINKING WATER TREATMENT UNITS

611.1 Design. Drinking water treatment units shall meet the requirements of NSF 42, NSF 44, NSF 53 or NSF 62.

611.2 Reverse osmosis systems. The discharge from a reverse osmosis drinking water treatment unit shall enter the drainage system through an air gap or an air gap device that meets the requirements of NSF 58.

611.3 Connection tubing. The tubing to and from drinking water treatment units shall be of a size and material as recommended by the manufacturer. The tubing shall comply with NSF 14, NSF 42, NSF 44, NSF 53, NSF 58 or NSF 61.

SECTION 612
SOLAR SYSTEMS

612.1 Solar systems. The construction, installation, alterations and repair of systems, equipment and appliances intended to utilize solar energy for space heating or cooling, domestic hot water heating, swimming pool heating or process heating shall be in accordance with the *International Mechanical Code*.

CHAPTER 25
PLUMBING ADMINISTRATION

SECTION P2501
GENERAL

P2501.1 Scope. The provisions of this chapter shall establish the general administrative requirements applicable to plumbing systems and inspection requirements of this code.

P2501.2 Application. In addition to the general administration requirements of Chapter 1, the administrative provisions of this chapter shall also apply to the plumbing requirements of Chapters 25 through 32.

SECTION P2502
EXISTING PLUMBING SYSTEMS

P2502.1 Existing building sewers and drains. Existing building sewers and drains shall be used in connection with new systems when found by examination and/or test to conform to the requirements prescribed by this document.

P2502.2 Additions, alterations or repairs. Additions, alterations, renovations or repairs to any plumbing system shall conform to that required for a new plumbing system without requiring the existing plumbing system to comply with all the requirements of this code. Additions, alterations or repairs shall not cause an existing system to become unsafe, insanitary or overloaded.

Minor additions, alterations, renovations and repairs to existing plumbing systems shall be permitted in the same manner and arrangement as in the existing system, provided that such repairs or replacement are not hazardous and are approved.

SECTION P2503
INSPECTION AND TESTS

P2503.1 Inspection required. New plumbing work and parts of existing systems affected by new work or alterations shall be inspected by the building official to ensure compliance with the requirements of this code.

P2503.2 Concealment. A plumbing or drainage system, or part thereof, shall not be covered, concealed or put into use until it has been tested, inspected and approved by the building official.

P2503.3 Responsibility of permittee. Test equipment, materials and labor shall be furnished by the permittee.

P2503.4 Building sewer testing. The building sewer shall be tested by insertion of a test plug at the point of connection with the public sewer and filling the building sewer with water, testing with not less than a 10-foot (3048 mm) head of water and be able to maintain such pressure for 15 minutes.

P2503.5 DWV systems testing. Rough and finished plumbing installations shall be tested in accordance with Sections P2503.5.1 and P2503.5.2.

P2503.5.1 Rough plumbing. DWV systems shall be tested on completion of the rough piping installation by water or air with no evidence of leakage. Either test shall be applied to the drainage system in its entirety or in sections after rough piping has been installed, as follows:

1. Water test. Each section shall be filled with water to a point not less than 10 feet (3048 mm) above the highest fitting connection in that section, or to the highest point in the completed system. Water shall be held in the section under test for 15 minutes before inspection. The system shall prove leak free by visual inspection.
2. Air test. The portion under test shall be maintained at a gauge pressure of 5 psi (34 kPa) or 10 inches of mercury column (2488 Pa). This pressure shall be held without introduction of additional air for a period of 15 minutes.

P2503.5.2 Finished plumbing. After the plumbing fixtures have been set and their traps filled with water, their connections shall be tested and proved gas tight and/or water tight as follows:

1. Water tightness. Each fixture shall be filled and then drained. Traps and fixture connections shall be proven water tight by visual inspection.
2. Gas tightness. When required by the local administrative authority, a final test for gas tightness of the DWV system shall be made by the smoke or peppermint test as follows:
   - 2.1. Smoke test. Introduce a pungent, thick smoke into the system. When the smoke appears at vent terminals, such terminals shall be sealed and a pressure equivalent to a 1-inch water column (249 Pa) shall be applied and maintained for the period of inspection.
   - 2.2. Peppermint test. Introduce 2 ounces (59 mL) of oil of peppermint into the system. Add 10 quarts (9464 mL) of hot water and seal all vent terminals. The odor of peppermint shall not be detected at any trap or other point in the system.

P2503.6 Water-supply system testing. Upon completion of the water-supply system or a section thereof, the system, or portion completed, shall be tested and proved tight under a water pressure not less than the working pressure of the system; or, for piping systems other than plastic, by an air test of not less than 50 psi (344 kPa). The water used for tests shall be obtained from a potable water source.

P2503.7 Inspection and testing of backflow prevention devices. Inspection and testing of backflow prevention devices shall comply with Section P2503.7.1 and Section P2503.7.2.

P2503.7.1 Inspections. Inspections shall be made of all backflow prevention assemblies to determine whether they are operable.

P2503.7.2 Testing. Reduced pressure principle backflow preventers, double check valve assemblies, double-detector check valve assemblies and pressure vacuum breaker assemblies shall be tested at the time of installation, immediately after repairs or relocation and at least annually.

CHAPTER 29

WATER SUPPLY AND DISTRIBUTION

SECTION P2901
GENERAL

P2901.1 Potable water required. Dwelling units shall be provided with a supply of potable water in the amounts and pressures specified in this chapter. In a building where both a potable and nonpotable water-distribution system are installed, each system shall be identified by color marking, metal tag or other appropriate method. Any nonpotable outlet that could inadvertently be used for drinking or domestic purposes shall be posted.

SECTION P2902
PROTECTION OF POTABLE WATER SUPPLY

P2902.1 General. A potable water supply system shall be designed and installed in such a manner as to prevent contamination from nonpotable liquids, solids or gases being introduced into the potable water supply. Connections shall not be made to a potable water supply in a manner that could contaminate the water supply or provide a cross-connection between the supply and source of contamination unless an approved backflow-prevention device is provided. Cross-connections between an individual water supply and a potable public water supply shall be prohibited.

P2902.2 Backflow protection. A means of protection against backflow shall be provided in accordance with Sections P2902.2.1 through P2902.2.6.

P2902.2.1 Air gaps. Air gaps shall comply with ASME/ANSI A112.1.2 or the requirements of this section. The minimum air gap shall be measured vertically from the lowest end of a water supply outlet to the flood level rim of the fixture or receptor into which such potable water outlets discharge. The minimum required air gap shall be twice the diameter of the effective opening of the outlet, but in no case less than the values specified in Table P2902.2.1. An air gap is required at the discharge point of a relief valve or piping. Air gap devices shall be incorporated in dishwashing and clothes washing appliances.

P2902.2.2 Atmospheric vacuum breakers. Pipe applied atmospheric vacuum breakers shall conform to ASSE/ANSI 1001. Hose connection vacuum breakers shall conform to ASSE/ANSI 1011, or ASSE/ANSI 1019. These devices shall operate under normal atmospheric pressure. Except deck-mounted and integral vacuum breakers, the critical level of an atmospheric-type vacuum breaker shall be set a minimum of 6 inches (152 mm) above the flood level rim of the fixture, device or highest point of usage. The vacuum breaker shall be installed in accordance with the manufacturer's installation instructions.

P2902.2.3 Backflow preventer with intermediate atmospheric vent. Backflow preventers with intermediate atmospheric vents shall conform to ASSE/ANSI 1012. These devices shall be permitted to be installed where subject to continuous pressure conditions. The relief opening shall discharge by air gap and shall be prevented from being submerged.

P2902.2.4 Hose connection backflow preventer. Hose connection backflow preventers shall conform to ASSE/ANSI 1052. The backflow preventer shall be installed on the discharge side of a hose threaded outlet.

P2902.2.5 Pressure-type vacuum breakers. Pressure-type vacuum breakers shall conform to ASSE/ANSI 1020 for outdoor use and ASSE/ANSI 1056 for spill-proof indoor use. These devices shall be designed for installation under continuous pressure conditions when the critical level is installed at the required height.

TABLE P2902.2.1
MINIMUM AIR GAPS

FIXTURE	MINIMUM AIR GAP	
	Away from a wall[a] (inches)	Close to a wall (inches)
Lavatories and other fixtures with effective opening not greater than $^1/_2$ inch in diameter	1	1.5
Sink, laundry trays, gooseneck back faucets and other fixtures with effective openings not greater than $^3/_4$ inch in diameter	1.5	2.5
Over-rim bath fillers and other fixtures with effective openings not greater than 1 inch in diameter	2	3
Effective openings greater than 1 inch	Two times the diameter of the effective opening	Three times the diameter of the effective opening

For SI: 1 inch = 25.4 mm.

a. Applicable where walls or obstructions are spaced from the nearest inside edge of the spout opening a distance greater than three times the diameter of the effective opening for a single wall, or a distance greater than four times the diameter of the effective opening for two intersecting walls.

P2902.2.6 Reduced pressure principle backflow preventer. Reduced pressure principle backflow preventers shall conform to ASSE/ANSI 1013. These devices are permitted to be installed where subject to continuous pressure conditions. The relief opening shall discharge by air gap and shall be prevented from being submerged.

P2902.3 Protection of potable water outlets. All potable water openings and outlets shall be protected by an air gap, atmospheric-type vacuum breaker, pressure-type vacuum breaker or hose connection backflow preventer.

P2902.3.1 Flush tanks. Flush tanks shall be equipped with an antisiphon ball cock conforming to ASSE/ANSI 1002. The ball cock shall be installed a minimum of 1 inch (25.4 mm) above the full opening of the overflow pipe.

P2902.3.2 Deck-mounted and integral vacuum breakers. Approved deck-mounted vacuum breakers and faucets with integral atmospheric or spill-proof vacuum breakers shall be installed in accordance with the manufacturer's installation instructions with the critical level not less than 1 inch (25.4 mm) above the flood level rim.

P2902.3.3 Hose connection. Sillcocks, hose bibbs, wall hydrants and other openings with a hose connection shall be protected by an atmospheric-type or pressure-type vacuum breaker or a permanently attached hose connection vacuum breaker complying with ASSE/ANSI 1001, ASSE/ANSI 1011, ASSE/ANSI 1012, ASSE/ANSI 1019, ASSE/ANSI 1020, ASSE/ANSI 1052 or ASSE/ANSI 1056.

Exceptions:

1. This section shall not apply to water heater and boiler drain valves that are provided with hose connection threads and that are intended only for tank or vessel draining.
2. This section shall not apply to water supply valves intended for connection of clothes washing machines where backflow prevention is otherwise provided or is integral with the machine.

P2902.4 Protection of potable water connections. All connections to the potable water shall conform to Sections P2902.4.1 through P2902.4.5.

P2902.4.1 Connections to boilers. The potable supply to the boiler shall be equipped with a backflow preventer with an intermediate atmospheric vent complying with ASSE/ANSI 1012. When boilers have conditioning chemicals introduced into the system, the potable water connection shall be protected by a reduced pressure principle backflow preventer complying with ASSE/ANSI 1013.

P2902.4.2 Heat exchangers. Heat exchangers utilizing an essentially toxic transfer fluid shall be separated from the potable water by double-wall construction. An air gap open to the atmosphere shall be provided between the two walls. Heat exchangers utilizing an essentially nontoxic transfer fluid are permitted to be of single-wall construction.

Exception: Heat exchangers utilizing an essentially toxic transfer fluid with a pressure on the transfer fluid side a minimum of 10 psi (69 kPa) lower than the pressure on the potable water side protected with a pressure gradient monitor are permitted to be of single-wall construction.

P2902.4.3 Lawn irrigation systems. The potable water supply to lawn irrigation systems shall be protected against backflow by an atmospheric-type vacuum breaker, a pressure-type vacuum breaker or a reduced pressure principle backflow preventer. A valve shall not be installed downstream from an atmospheric vacuum breaker. All devices shall be installed in accordance with manufacturer's installation instructions.

P2902.4.4 Connections to automatic fire sprinkler systems. The potable water supply to automatic fire sprinkler systems shall be protected against backflow by a double check-valve assembly or a reduced pressure principle backflow preventer.

Exception: Where systems are installed as a portion of the water distribution system in accordance with the requirements of this code and are not provided with a fire department connection, isolation of the water supply system shall not be required.

P2902.4.4.1 Additives or nonpotable source. Where systems contain chemical additives or antifreeze, or where systems are connected to a nonpotable secondary water supply, the potable water supply shall be protected against backflow by a reduced pressure principle backflow preventer. Where chemical additives or antifreeze are added to only a portion of an automatic fire sprinkler or standpipe system, the reduced pressure principle backflow preventer shall be permitted to be located so as to isolate that portion of the system.

P2902.4.5 Solar systems. The potable water supply to a solar system shall be equipped with a backflow preventer with intermediate atmospheric vent complying with ASSE/ANSI 1012 or a reduced pressure principle backflow preventer complying with ASSE/ANSI 1013. Where chemicals are utilized, the potable water supply shall be protected by a reduced pressure principle backflow preventer.

P2902.5 Access. All backflow prevention devices shall be accessible for inspection and servicing.

SECTION P2903
WATER-SUPPLY SYSTEM

P2903.1 Water supply system design criteria. The water service and water distribution systems shall be designed and pipe sizes shall be selected such that under conditions of peak demand, the capacities at the point of outlet discharge shall not be less than shown in Table P2903.1.

P2903.2 Maximum flow and water consumption. The maximum water consumption flow rates and quantities for all plumbing fixtures and fixture fittings shall be in accordance with Table P2903.2.

TABLE P2903.1
REQUIRED CAPACITIES AT POINT OF OUTLET DISCHARGE

FIXTURE AT POINT OF OUTLET	FLOW RATE (gpm)	FLOW PRESSURE (psi)
Bathtub	4	8
Bidet	2	4
Dishwasher	2.75	8
Laundry tub	4	8
Lavatory	2	8
Shower	3	8
Shower, temperature controlled	3	20
Sillcock, hose bibb	5	8
Sink	2.5	8
Water closet, flushometer tank	1.6	15
Water closet, tank, close coupled	3	8
Water closet, tank, one-piece	6	20

For SI: 1 gallon per minute = 3.785 L/m, 1 pound per square inch = 6.895 kPa.

TABLE P2903.2
MAXIMUM FLOW RATES AND CONSUMPTION FOR PLUMBING FIXTURES AND FIXTURE FITTINGS[b]

PLUMBING FIXTURE OR FIXTURE FITTING	PLUMBING FIXTURE OR FIXTURE FITTING
Lavatory faucet	2.2 gpm at 60 psi
Shower head[a]	2.5 gpm at 80 psi
Sink faucet	2.2 gpm at 60 psi
Water closet	1.6 gallons per flushing cycle

For SI: 1 gallon per minute = 3.785 L/m, 1 pound per square inch = 6.895 kPa.

a. A handheld shower spray is also a shower head.

b. Consumption tolerances shall be determined from referenced standards.

P2903.3 Minimum pressure. Minimum static pressure (as determined by the local water authority) at the building entrance for either public or private water service shall be 40 psi (276 kPa).

P2903.3.1 Maximum pressure. Maximum static pressure shall be 80 psi (551 kPa). When main pressure exceeds 80 psi (551 kPa), an approved pressure-reducing valve conforming to ASSE/ANSI 1003 shall be installed on the domestic water branch main or riser at the connection to the water-service pipe.

P2903.4 Thermal expansion. In addition to the required pressure relief valve, an approved device for thermal expansion control shall be installed on any water supply system utilizing storage water heating equipment whenever the building supply pressure is greater than the required relief valve pressure setting or when any device, such as a pressure reducing valve, backflow preventer or check valve, is installed that prevents pressure relief through the building supply. The thermal expansion control device shall be sized in accordance with the manufacturer's installation instructions.

P2903.5 Water hammer. The flow velocity of the water distribution system shall be controlled to reduce the possibility of water hammer. A water-hammer arrestor shall be installed where quick-closing valves are utilized, unless otherwise approved. Water hammer arrestors shall be installed in accordance with manufacturer's installation instructions. Water-hammer arrestors shall conform to ASSE/ANSI 1010.

P2903.6 Determining water-supply fixture units. Supply load in the building water-distribution system shall be determined by total load on the pipe being sized, in terms of water-supply fixture units (w.s.f.u.), as shown in Table P2903.6. For fixtures not listed, choose a w.s.f.u. value of a fixture with similar flow characteristics.

P2903.7 Size of water-service mains, branch mains and risers. The minimum size water service pipe shall be $^3/_4$ inch (19.1 mm). The size of water service mains, branch mains and risers shall be determined according to water supply demand [gpm (L/m)], available water pressure [psi (kPa)] and friction loss due to the water meter and developed length of pipe [feet (m)], including equivalent length of fittings. The size of each water distribution system shall be determined according to the procedure outlined in this section or by other design methods conforming to acceptable engineering practice and approved by the administrative authority:

1. Obtain the minimum daily static service pressure [psi (kPa)] available (as determined by the local water authority) at the water meter or other source of supply at the installation location. Adjust this minimum daily static pressure [psi (kPa)] for the following conditions:
   1.1. Determine the difference in elevation between the source of supply and the highest water supply outlet. Where the highest water supply outlet is located above the source of supply, deduct 0.5 psi (3.4 kPa) for each foot (0.3 m) of difference in elevation. Where the highest water supply outlet is located below the source of supply, add 0.5 psi (3.4 kPa) for each foot (0.3 m) of difference in elevation.
   1.2. Where a water pressure reducing valve is installed in the water distribution system, the minimum daily static water pressure available is 80 percent of the minimum daily static water pressure at the source of supply or the set pressure downstream of the pressure reducing valve, whichever is smaller.
   1.3. Deduct all pressure losses due to special equipment such as a backflow preventer, water filter and water softener. Pressure loss data for each piece of equipment shall be obtained through the manufacturer of such devices.
   1.4. Deduct the pressure in excess of 8 psi (55 kPa) due to installation of the special plumbing fixture, such as temperature controlled shower and flushometer tank water closet.

   Using the resulting minimum available pressure, find the corresponding pressure range in Table P2903.7.
2. The maximum developed length for water piping is the actual length of pipe between the source of supply and the most remote fixture, including either hot (through the water heater) or cold water branches multiplied by a factor of 1.2 to compensate for pressure loss through fittings.

Select the appropriate column in Table P2903.7 equal to or greater than the calculated maximum developed length.

3. To determine the size of water service pipe, meter and main distribution pipe to the building using the appropriate table, follow down the selected "maximum developed length" column to a fixture unit equal to, or greater than the total installation demand calculated by using the "combined" water supply fixture unit column of Table P2903.6. Read the water service pipe and meter sizes in the first left-hand column and the main distribution pipe to the building in the second left-hand column on the same row.
4. To determine the size of each water distribution pipe, start at the most remote outlet on each branch (either hot or cold branch) and, working back toward the main distribution pipe to the building, add up the water supply fixture unit demand passing through each segment of the distribution system using the related hot or cold column of Table P2903.6. Knowing demand, the size of each segment shall be read from the second left-hand column of the same table and maximum developed length column selected in Steps 1 and 2, under the same or next smaller size meter row. In no case does the size of any branch or main need to be larger that the size of the main distribution pipe to the building established in Step 3.

P2903.8 Parallel water-distribution system manifolds. Hot and cold parallel water-distribution system manifolds with individual distribution lines to each fixture or fixture fitting shall be sized and installed in accordance with Sections P2903.8.1 through P2903.8.7

P2903.8.1 Sizing of manifolds. Manifold shall be sized in accordance with Table P2903.8.1. Total gallons per minute is the demand for all outlets.

P2903.8.2 Minimum size. The minimum size of individual distribution lines shall be $^3/_8$ inch (9.5 mm). Certain fixtures such as one-piece water closets and whirlpool bathtubs shall require a larger size where specified by the manufacturer. If a water heater is fed from the end of a cold water manifold, the manifold shall be one size larger than the water heater feed.

P2903.8.3 Maximum length. The maximum length of individual distribution lines shall be 60 feet (18 288 mm) nominal.

P2903.8.4 Orientation. Manifolds shall be permitted to be installed in a horizontal or vertical position.

P2903.8.5 Support and protection. Plastic piping bundles shall be secured in accordance with the manufacturer's installation instructions and supported in accordance with Section P2605. Bundles that have a change in direction equal to or greater than 45 degrees (0.79 rad) shall be protected from chaffing at the point of contact with framing members by sleeving or wrapping.

P2903.8.6 Valving. Fixture valves, when installed, shall be located either at the fixture or at the manifold. If valves are installed at the manifold, they shall be labeled indicating the fixture served.

P2903.8.7 Hose bibb bleed. A readily accessible air bleed shall be installed in hose bibb supplies at the manifold or at the hose bibb exit point.

TABLE P2903.6
WATER-SUPPLY FIXTURE-UNIT VALUES FOR VARIOUS PLUMBING FIXTURES AND FIXTURE GROUPS

TYPE OF FIXTURES OR GROUP OF FIXTURES	WATER-SUPPLY FIXTURE-UNIT VALUE (w.s.f.u.)		
	Hot	Cold	Combined
Bathtub (with/without overhead shower head)	1.0	1.0	1.4
Clothes washer	1.0	1.0	1.4
Dishwasher	1.4	—	1.4
Hose bibb (sillcock)[a]	—	2.5	2.5
Kitchen sink	1.0	1.0	1.4
Lavatory	0.5	0.5	0.7
Laundry tub	1.0	1.0	1.4
Shower stall	1.0	1.0	1.4
Water closet (tank type)	—	2.2	2.2
Full-bath group with bathtub (with/without shower head) or shower stall	1.5	2.7	3.6
Half-bath group (water closet and lavatory)	0.5	2.5	2.6
Kitchen group (dishwasher and sink with/without garbage grinder)	1.9	1.0	2.5
Laundry group (clothes washer standpipe and laundry tub)	1.8	1.8	2.5

For SI: 1 gallon per minute = 3.785 L/m.

a. The fixture unit value 2.5 assumes a flow demand of 2.5 gpm, such as for an individual lawn sprinkler device. If a hose bibb/sill cock will be required to furnish a greater flow rate, the equivalent fixture-unit value may be obtained from Table P2903.6 or Table P2903.7.

TABLE P2903.7
MINIMUM SIZE OF WATER METERS, MAINS AND DISTRIBUTION PIPING BASED ON WATER SUPPLY FIXTURE UNIT VALVES (w.s.f.u.)

Pressure Range—30 to 39 psi

METER AND SERVICE PIPE (inches)	DISTRIBUTION PIPE (inches)	MAXIMUM DEVELOPMENT LENGTH (feet)									
		40	60	80	100	150	200	250	300	400	500
3/4	1/2[a]	2.5	2	1.5	1.5	1	1	.5	.5	0	0
3/4	3/4	9.5	7.5	6	5.5	4	3.5	3	2.5	2	1.5
3/4	1	32	25	20	16.5	11	9	7.5	6.5	5.5	4.5
1	1	32	32	27	21	13.5	10	8	7	5.5	5
3/4	1 1/4	32	32	32	32	30	24	20	17	13	10.5
1	1 1/4	80	80	70	61	45	34	27	22	16	12
1 1/2	1 1/4	80	80	80	75	54	40	31	25	17.5	13
1	1 1/2	87	87	87	87	84	73	74	56	45	36
1 1/2	1 1/2	151	151	151	151	117	92	79	69	54	43

a. Minimum size for building supply is 3/4-inch pipe.

Pressure Range—40 to 49 psi

METER AND SERVICE PIPE (inches)	DISTRIBUTION PIPE (inches)	MAXIMUM DEVELOPMENT LENGTH (feet)									
		40	60	80	100	150	200	250	300	400	500
3/4	1/2[a]	3	2.5	2	1.5	1.5	1	1	.5	.5	.5
3/4	3/4	9.5	9.5	8.5	7	5.5	4.5	3.5	3	2.5	2
3/4	1	32	32	32	26	18	13.5	10.5	9	7.5	6
1	1	32	32	32	32	21	15	11.5	9.5	7.5	6.5
3/4	1 1/4	32	32	32	32	32	32	32	27	21	16.5
1	1 1/4	80	80	80	80	65	52	42	35	26	20
1 1/2	1 1/4	80	80	80	80	75	59	48	39	28	21
1	1 1/2	87	87	87	87	87	87	87	78	65	55
1 1/2	1 1/2	151	151	151	151	151	130	109	93	75	63

a. Minimum size for building supply is 3/4-inch pipe.

Pressure Range—50 to 60 psi

METER AND SERVICE PIPE (inches)	DISTRIBUTION PIPE (inches)	MAXIMUM DEVELOPMENT LENGTH (feet)									
		40	60	80	100	150	200	250	300	400	500
3/4	1/2[a]	3	3	2.5	2	1.5	1	1	1	.5	.5
3/4	3/4	9.5	9.5	9.5	8.5	6.5	5	4.5	4	3	2.5
3/4	1	32	32	32	32	25	18.5	14.5	12	9.5	8
1	1	32	32	32	32	30	22	16.5	13	10	8
3/4	1 1/4	32	32	32	32	32	32	32	32	29	24
1	1 1/4	80	80	80	80	80	68	57	48	35	28
1 1/2	1 1/4	80	80	80	80	80	75	63	53	39	29
1	1 1/2	87	87	87	87	87	87	87	87	82	70
1 1/2	1 1/2	151	151	151	151	151	151	139	120	94	79

a. Minimum size for building supply is 3/4-inch pipe.

(continued)

TABLE P2903.7—continued
MINIMUM SIZE OF WATER METERS, MAINS AND DISTRIBUTION PIPING
BASED ON WATER SUPPLY FIXTURE UNIT VALVES (w.s.f.u.)

Pressure Range—over 60 psi

METER AND SERVICE PIPE (inches)	DISTRIBUTION PIPE (inches)	MAXIMUM DEVELOPMENT LENGTH (feet)									
		40	60	80	100	150	200	250	300	400	500
3/4	1/2[a]	3	3	3	2.5	2	1.5	1.5	1	1	.5
3/4	3/4	9.5	9.5	9.5	9.5	7.5	6	5	4.5	3.5	3
3/4	1	32	32	32	32	32	24	19.5	15.5	11.5	9.5
1	1	32	32	32	32	32	28	22	17	12	9.5
3/4	1 1/4	32	32	32	32	32	32	32	32	32	30
1	1 1/4	80	80	80	80	80	80	69	60	46	36
1 1/2	1 1/4	80	80	80	80	80	80	76	65	50	38
1	1 1/2	87	87	87	87	87	87	87	87	87	84
1 1/2	1 1/2	151	151	151	151	151	151	151	144	114	94

For SI: 1 inch = 25.4 mm, 1 foot = 304.8 mm.

a. Minimum size for building supply is 3/4-inch pipe.

TABLE P2903.8.1
MANIFOLD SIZING

PLASTIC		METALLIC	
Nominal Size ID (inches)	Maximum[a] gpm	Nominal Size ID (inches)	Maximum[a] gpm
3/4	17	3/4	11
1	29	1	20
1 1/4	46	1 1/4	31
1 1/2	66	1 1/2	44

For SI: 1 inch = 25.4 mm, 1 gallon per minute = 3.785 L/m, 1 foot per second = 0.3048 m/s.

NOTE: See Table P2903.7 for w.s.f.u.

a. Based on velocity limitation: plastic—12 fps; metal—8 fps.

P2903.9 Valves. Valves shall be installed in accordance with Sections P2903.9.1 through P2903.9.3.

P2903.9.1 Service valve. Each dwelling unit shall be provided with an accessible main shutoff valve near the entrance of the water service. The valve shall be of a full-open type having nominal restriction to flow, with provision for drainage such as a bleed orifice or installation of a separate drain valve. Additionally, the water service shall be valved at the curb or property line in accordance with local requirements.

P2903.9.2 Water heater valve. A readily accessible full-open valve shall be installed in the cold-water supply pipe to each water heater at or near the water heater.

P2903.9.3 Valve requirements. Valves serving individual fixtures, appliances, risers and branches shall be provided with access. An individual shutoff valve shall be required on the water supply pipe to each water closet.

P2903.10 Hose bibb. Hose bibbs subject to freezing, including the "frost-proof" type, shall be equipped with an accessible stop-and-waste-type valve inside the building so that they may be controlled and/or drained during cold periods.

Exception: Frost-proof hose bibbs installed such that the stem extends through the building insulation into an open heated or semi-conditioned space need not be separately valved. (See Figure P2903.10.)

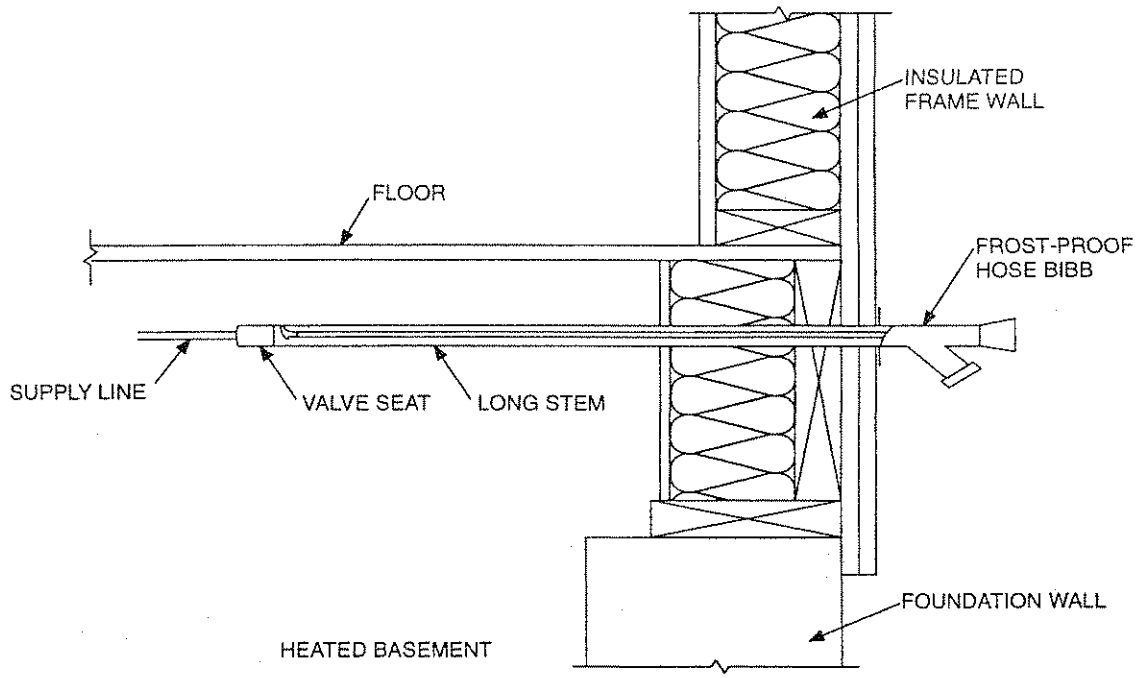

FIGURE P2903.10
TYPICAL FROST-PROOF HOSE BIBB INSTALLATION NOT REQUIRING SEPARATE VALUE

SECTION P2904
MATERIALS, JOINTS AND CONNECTIONS

P2904.1 Soil and groundwater. The installation of water service piping, fittings, valves, appurtenances and gaskets shall be prohibited in soil and groundwater that is contaminated with solvents, fuels, organic compounds or other detrimental materials that cause permeation, corrosion, degradation or structural failure of the water service material.

P2904.1.1 Investigation required. Where detrimental conditions are suspected by or brought to the attention of the building official, a chemical analysis of the soil and groundwater conditions shall be required to ascertain the acceptability of the water service material for the specific installation.

P2904.1.2 Detrimental condition. When a detrimental condition exists, approved alternate materials or alternate routing shall be required.

P2904.2 Lead content. Pipe and fittings utilized in the water-supply system shall have a maximum of 8 percent lead.

P2904.3 Polyethylene plastic piping installation. Polyethylene pipe shall be cut square, using a cutter designed for plastic pipe. Except when joined by heat fusion, pipe ends shall be chamfered to remove sharp edges. Pipe that has been kinked shall not be installed. For bends, the installed radius of pipe curvature shall be greater than 30 pipe diameters or the coil radius when bending with the coil. Coiled pipe shall not be bent beyond straight. Bends shall not be permitted within ten pipe diameters of any fitting or valve. Stiffener inserts used with compression-type fittings shall not extend beyond the clamp or nut of the fitting. Flared joints shall be permitted where recommended by the manufacturer and made by the use of a tool designed for that operation.

P2904.4 Water service pipe. Water service pipe shall conform to one of the standards listed in Table P2904.4.1. Water service pipe or tubing, installed underground and outside of the structure, shall have a minimum working pressure rating of 160 psi at 73°F (1100 kPa at 23°C).

P2904.4.1 Water service installation. Trenching, pipe installation and backfilling shall be in accordance with Section P2604. Water-service pipe is permitted to be located in the same trench with a building sewer provided such sewer is constructed of materials listed for underground use within a building in Section P3002.1. If the building sewer is not constructed of materials listed in Section P3002.1, the water-service pipe shall be separated from the building sewer by a minimum of 5 feet (1524 mm), measured horizontally, of undisturbed or compacted earth or placed on a solid ledge at least 12 inches (305 mm) above and to one side of the highest point in the sewer line.

TABLE P2904.4.1[a]
WATER SERVICE, SUPPLY AND DISTRIBUTION PIPING

MATERIAL	STANDARD
ABS plastic pipe (SDR-PR)	ASTM D 2282
ABS plastic pipe schedule 40 and 80	ASTM D 1527
CPVC plastic hot and cold water distribution systems	ASTM D 2846
CPVC plastic pipe schedule 40 and 80	ASTM F 441
CPVC plastic pipe schedule (SDR-PR)	ASTM F 442
Crosslinked P.E. plastic hot and cold water distribution	ASTM F 877
Crosslinked polyethylene (PEX) tubing	ASTM F 876
Crosslinked polyethylene/aluminum/crosslinked polybutylene (PEX-AL-PEX) for water service and water distribution piping	ASTM F 1281
Ductile iron pressure pipe	ASTM A 377
P.B. plastic hot water distribution systems	ASTM D 3309
Polybutylene/aluminum/polyethylene (PE-AL-PE) for water service piping	ASTM F 1282
Polybutylene (PB) plastic pipe (SDR-PR) based on outside diameter	ASTM D 3000
Polybutylene (PB) plastic tubing	ASTM D 2666
Polybutylene (PE) plastic tubing	ASTM D 2737
Polyethylene (PE) plastic pipe (SDR-PR)	ASTM D 3000
Polyethylene (PE) plastic pipe controlled OD	ASTM D 2447
Polyethylene plastic pipe, schedule 40	ASTM D 2104
Polyethylene plastic pipe (SDR-PR) controlled ID	ASTM D 2239
PVC plastic pipe schedule 40, 80 and 120	ASTM D 1785
PVC pressure rated pipe (SDR Series)	ASTM D 2241
Seamless brass type	ASTM B 135
Seamless copper tube	ASTM B 75
Seamless copper watertube Type K, L and M	ASTM B 88
Seamless red brass pipe, standard sizes	ASTM B 43
Specification for polybutylene (PB) plastic pipe (SIDR-PR) based on controlled inside diameter	ASTM D 2662
Welded copper water tube (WK, WL, WM)	ASTM B 447

a. Please note that Table P2904.4.1 includes standards for materials for use with cold water only.

P2904.5 Water-distribution pipe. Water-distribution piping within dwelling units shall conform to one of the standards in Table P2904.4.1. ABS, PVC, PE-AL-PE or PE plastic pipe shall not be used for water distribution piping. CPVC, Crosslinked PEX, PEX-AL-PEX or PB plastic pipe is permitted to be used for both hot and cold water. All hot-water-distribution pipe and tubing shall have a minimum pressure rating of 100 psi at 180°F (689 kPa at 82°C). Water distribution pipe shall conform to NSF 61.

P2904.5.1 Under concrete slabs. Inaccessible water distribution piping under slabs shall be copper water tube minimum Type M, brass, ductile iron pressure pipe, galvanized steel pipe, chlorinated polyvinyl chloride (CPVC) or polybutylene (PB) or crosslinked polyethylene (PEX) plastic pipe or tubing—all to be installed with approved fittings or bends. The minimum pressure rating for plastic pipe or tubing installed under slabs shall be 100 psi at 180°F (689 kPa at 82°C).

P2904.6 Fittings. Pipe fittings shall be approved for installation with the piping material installed, and shall conform to the respective pipe standards listed in Table P2904.4.1 or one of the standards listed in Table P2904.6.

TABLE P2904.6
PIPE FITTINGS

MATERIAL	STANDARD
ABS plastic fittings, schedule 40	ASTM D 2468
Butt heat fusion P.E. fittings for plastic pipe and fittings	ASTM D 3261
Cast copper alloy solder-joint pressure fittings	ASME B 16.18
Metal insert fittings for P.B. tubing	ASTM F 1380
Metal insert fittings utilizing a copper crimp ring SDR9 (PEX) tubing	ASTM F 1807
Plastic insert fittings for P.B. tubing	ASTM F 845
Plastic insert fittings for P.E. plastic pipe	ASTM D 2609
PVC plastic pipe fittings, schedule 40	ASTM D 2466
Socket bell for PVC plastic pipe	ASTM D 2672
Socket Type CPVC plastic pipe fittings, schedule 40	ASTM F 438
Socket Type CPVC plastic pipe fittings, schedule 80	ASTM F 439
Socket Type PVC plastic pipe fittings sch. 80	ASTM D 2467

P2904.7 Joint and connection tightness. Joints and connections in the plumbing system shall be gas tight and water tight for the intended use or required test pressure.

P2904.8 Plastic pipe joints. Joints in plastic piping shall be made with approved fittings by solvent cementing, heat fusion, corrosion-resistant metal clamps with insert fittings or compression connections. Flared joints for polyethylene pipe are permitted in accordance with Section P2904.3.

P2904.8.1 Solvent cementing. Solvent cemented joints shall comply with Sections P2904.8.1.1 through P2904.8.1.3.

P2904.8.1.1 ABS plastic pipe. Solvent cement for ABS plastic pipe conforming to ASTM D 2235 shall be applied to all joint surfaces.

P2904.8.1.2 CPVC plastic pipe. Solvent cement for CPVC plastic pipe conforming to ASTM F 493 shall be applied to all joint surfaces. The joint shall be made while the cement is wet, and in accordance with ASTM D 2846 or ASTM F 493. Solvent-cement joints shall be permitted above or below ground.

P2904.8.1.3 PVC plastic pipe. A primer complying with ASTM F 656 shall be applied to all PVC solvent cemented joints. Solvent cement for PVC plastic pipe conforming to ASTM D 2564 shall be applied to all joint surfaces.

P2904.8.1.4 Cross-linked polyethylene plastic (PEX). Joints between cross-linked polyethylene plastic tubing or fittings shall comply with Section P2904.8.1.4.1 or Section P2904.8.1.4.2.

P2904.8.1.4.1 Flared joints. Flared pipe ends shall be made by a tool designed for that operation.

P2904.8.1.4.2 Mechanical joints. Mechanical joints shall be installed in accordance with the manufacturer's instructions. Metallic lock rings and insert fittings complying with ASTM F 1807 shall be installed in accordance with the manufacturer's instructions.

P2904.9 Threaded pipe joints. Threaded joints shall conform to American National Taper Pipe Thread specifications. Pipe ends shall be deburred and chips removed. Pipe joint compound shall be used only on male threads.

P2904.10 Soldered joints. Soldered joints in tubing shall be made with fittings approved for water piping and shall conform to ASTM B 828. Surfaces to be soldered shall be cleaned bright. The joints shall be properly fluxed and made with approved solder. Solders and fluxes used in potable water-supply systems shall have a maximum of 0.2 percent lead. Fluxes shall conform to ASTM B 813.

P2904.11 Flared joints. Flared joints in water tubing shall be made with approved fittings. The tubing shall be reamed and then expanded with a flaring tool.

P2904.12 Underground joints. Joints in polybutylene (PB) plastic pipe or tubing underground or under a concrete floor slab shall be installed using heat fusion, in accordance with the manufacturer's installation instructions. Joints in copper pipe or tube installed in a concrete floor slab or under a concrete floor slab on grade shall be installed using wrought-copper fittings and brazed joints.

P2904.13 Above-ground joints. Joints within the building between copper pipe, polybutylene tubing or CPVC tubing, in any combination with compatible outside diameters, are permitted to be made with the use of approved push-in mechanical fittings of a pressure-lock design.

P2904.14 Joints between different materials. Joints between different piping materials shall be made in accordance with Sections P2904.14.1 and P2904.14.2 or with a mechanical joint of the compression or mechanical sealing type having an elastomeric seal conforming to ASTM D 1869 or ASTM F 477. Joints shall be installed in accordance with the manufacturer's instructions.

P2904.14.1 Copper or copper-alloy tubing to galvanized steel pipe. Joints between copper or copper-alloy tubing and galvanized steel pipe shall be made with a brass converter fitting or dielectric fitting. The copper tubing shall be joined to the fitting in an approved manner, and the fitting shall be screwed to the threaded pipe.

P2904.14.2 Plastic pipe or tubing to other piping material. Joints between different grades of plastic pipe or between plastic pipe and other piping material shall be made with an approved adapter fitting. Joints between plastic pipe and cast-iron hub pipe shall be made by a caulked joint or a mechanical compression joint.

SECTION P2905
CHANGES IN DIRECTION

P2905.1 Bends. Changes in direction in copper tube are permitted to be made with bends having a radius of not less than four diameters of the tube, providing such bends are made by use of forming equipment that does not deform or create loss in cross-sectional area of the tube.

SECTION P2906
SUPPORT

P2906.1 General. Pipe and tubing support shall conform to Section P2605.

SECTION P2907
DRINKING WATER TREATMENT UNITS

P2907.1 Design. Drinking water treatment units shall meet the requirements of either NSF 42, NSF 44 or NSF 53.

P2907.2 Reverse osmosis drinking water treatment units. Point-of-use reverse osmosis drinking water treatment units, designed for residential use, shall meet requirements of NSF 58. Waste or discharge from reverse osmosis drinking water treatment units shall enter the drainage system through an air gap or an air gap device that meets the requirements of NSF 58.

P2907.3 Connection tubing. The tubing to and from drinking water treatment units shall be of a size and material as recommended by the manufacturer. The tubing shall comply with NSF 14, NSF 42, NSF 44, NSF 53, NSF 58 or NSF 61.

City of Belton

Section 5

CITY OF BELTON
CODE OF ORDINANCES
(SECTION 22-66 through SECTION 22-75)

(See attached pages)

DIVISION 5. CROSS-CONNECTION CONTROL*

***Editor's note:** Ord. No. 91-2035, §§ 1--10, adopted Feb. 26, 1991, enacted a **cross-connection control** policy to protect the public water supply. Such provisions did not specify manner of codification, but have been included as Div. 5, §§ 22-66--22-75 by the editor.

Cross references: Interconnection of city and private mains, § 22-54.

Sec. 22-66. General policy.

(a) *Purpose.* The purpose of this division is:

(1) To protect the public potable water supply from contamination or pollution by containing within the consumer's internal distribution system or private water system contaminants or pollutants which could backflow through the service connection into the public potable water supply system.

(2) To promote the elimination, containment, isolation, or **control** of existing **cross-connections**, actual or potential, between the public or consumer's potable water system and nonpotable water systems, plumbing fixtures, and industrial process systems.

(3) To provide for the maintenance of a continuing program of **cross-connection control** which will systematically and effectively prevent the contamination or pollution of all potable water systems.

(b) *Application.* This division shall apply to all premises served by the public potable water system of the City of Belton.

(c) *Policy.* This division will be reasonably interpreted by the water purveyor. It is the water purveyor's intent to recognize the varying degrees of hazard and to apply the principle that the degree of protection shall be commensurate with the degree of hazard.

The water purveyor shall be primarily responsible for protection of the public potable water distribution system from contamination or pollution due to backflow or contaminants or pollutants through the water service **connection**. The cooperation of all consumers is required to implement and maintain the program to **control cross-connections**. The water purveyor and consumer are jointly responsible for preventing contamination of the water system.

If, in the judgement of the water purveyor or his authorized representative, **cross-connection** protection is required through either piping modification or installation of an approved backflow prevention device, due notice shall be given to the consumer. The consumer shall immediately comply by providing the required protection at his own expense;

and failure, refusal, or inability on the part of the consumer to provide such protection shall constitute grounds for discontinuing water service to the premises until such protection has been provided.

(Ord. No. 91-2035, § 1, 2-26-91)

Sec. 22-67. Definitions.

The following definitions shall apply in the interpretations and enforcement of this division:

Air gap separation means the unobstructed vertical distance through the free atmosphere between the lowest opening from any pipe or faucet supplying water to a tank, plumbing fixture, or other device and the overflow level rim of the receptacle, and shall be at least double the diameter of the supply pipe measured vertically above the flood level rim of the vessel, but in no case less than one (1) inch.

Auxiliary water supply means any water source or system, other than the public water supply, that may be available in the building or premises.

Backflow means the flow other than the intended direction of flow of any foreign liquids, gases, or substances into the distribution system of a public water supply.

Backflow prevention device means any device, methods, or type of construction intended to prevent backflow into a potable water system.

Consumer means the owner or person in control of any premises supplied by or in any manner connected to a public water system.

Containment means protection of the public water supply by installing a **cross-connection control** device or air gap separation on the main service line to a facility.

Contamination means an impairment of the quality of the water by sewage, process fluids, or other wastes to a degree which could create an actual hazard to the public health through poisoning or through spread of disease by exposure.

Cross-connection means any physical link between a potable water supply and any other substance, fluid, or source, which makes possible the contamination of the potable water supply due to the reversal of flow of the water in the piping or distribution system.

Hazard, degree of means an evaluation of the potential risk to public health and the adverse effect of the hazard upon the potable water system.

(1) *Hazard, health*--Any condition, device, or practice in the water supply system and its operation which could create or may create a danger to the health and well-being of the water consumer.

(2) *Hazard, plumbing*--A plumbing type **cross-connection** in a consumer's potable

water system that has not been properly protected by a vacuum breaker, air gap separation or backflow prevention device.

(3) *Hazard, pollutional*--An actual or potential threat to the physical properties of the water system or to the potability of the public or the consumer's potable water system but which would constitute a nuisance or be aesthetically objectionable or would cause damage to the system or its appurtenances, but would not be dangerous to health.

(4) *Hazard, system*--An actual or potential threat of severe damage to the physical properties of the public potable water system or the consumer's potable water system, or of a pollution or contamination which would have a protracted effect on the quality of the potable water in the system.

Industrial process system means any system containing a fluid or solution, which may be chemically, biologically, or otherwise contaminated or polluted in a form or concentration such as would constitute a health, system, pollutional, or plumbing hazard if introduced into a potable water supply.

Isolation means protection of a facility service line by installing a **cross-connection control** device or air gap separation on an individual fixture, appurtenance, or system.

Pollution means the presence of any foreign substance (organic, inorganic, or biological) in water which tends to degrade its quality so as to constitute a hazard or impair the usefulness of the water to a degree which does not create an actual hazard to the public health but which does adversely and unreasonably affect such waters for domestic use.

Public potable water system means any publicly or privately owned water system supplying water to the general public which is satisfactory for drinking, culinary, and domestic purposes and meets the requirements of the Missouri Department of Natural Resources.

Service ***connection*** means the terminal end of a service line from the public water system. If a meter is installed at the end of the service, then the service **connection** means the downstream end of the meter.

Water purveyor means the owner, operator, or individual in responsible charge of a public water system.

(Ord. No. 91-2035, § 2, 2-26-91)

Sec. 22-68. Cross-connections prohibited.

(a) No water service **connection** shall be installed or maintained to any premises where actual or potential **cross-connections** to the public potable or consumer's water system may exist unless such actual or potential **cross-connections** are abated or **controlled** to the satisfaction of the water purveyor, and as required by the laws and regulations of the Missouri Department of Natural Resources.

(b) No connection shall be installed or maintained whereby an auxiliary water supply may enter a public potable or consumer's water system unless such auxiliary water supply and the method of connection and use of such supply shall have been approved by the water purveyor and the Missouri Department of Natural Resources.

(c) No water service connection shall be installed or maintained to any premises in which the plumbing system, facilities, and fixtures have not been constructed and installed using acceptable plumbing practices considered by the water purveyor as necessary for the protection of health and safety.

(Ord. No. 91-2035, § 3, 2-26-91)

Sec. 22-69. Survey and investigations.

(a) The consumer's premises shall be open at all reasonable times to the water purveyor, or his authorized representative, for the condition of surveys and investigations of water use practices within the consumer's premises to determine whether there are actual or potential **cross-connections** to the consumer's water system through which contaminants or pollutants could backflow into the public potable water system.

(b) On request by the water purveyor or his authorized representative, the consumer shall furnish information on water use practices within his premises.

(c) It shall be the responsibility of the water consumer to conduct periodic surveys of water use practices on his premises to determine whether there are actual or potential **cross-connections** to his water system through which contaminants or pollutants could backflow into his or the public potable water system.

(Ord. No. 91-2035, § 4, 2-26-91)

Sec. 22-70. Type of protection required.

(a) The type of protection required by this division shall depend on the degree of hazard which exists, as follows:

(1) An approved air gap separation shall be installed where the public potable water system may be contaminated with substances that could cause a severe health hazard.

(2) An approved air gap separation or an approved reduced pressure principle backflow prevention device shall be installed where the public potable water system may be contaminated with a substance that could cause a system or health hazard.

(3) An approved air gap separation or an approved reduced pressure principle backflow prevention device or an approved double check valve assembly shall

be installed where the public potable water system may be polluted with substances that could cause a pollutional hazard not dangerous to health.

(Ord. No. 91-2035, § 5, 2-26-91)

Sec. 22-71. Where protection is required.

(a) An approved backflow prevention device shall be installed on each service line to a consumer's water system service premises where, in the judgment of the water purveyor or the Missouri Department of Natural Resources, actual or potential hazards to the public potable water system exist. The type and degree of protection required shall be commensurate with the degree of hazard.

(b) An approved air gap separation or reduced pressure principle backflow prevention device shall be installed at the service **connection** or within any premises where, in the judgement of the water purveyor or the Missouri Department of Natural Resources, the nature and extent of activities on the premises, or the materials used in **connection** with the activities, or materials stored on the premises, would present an immediate and dangerous hazard to health should a **cross-connection** occur, even though such **cross-connection** may not exist at the time the backflow prevention device is required to be installed. This includes but is not limited to the following situations:

(1) Premises having an auxiliary water supply, unless the quality of the auxiliary supply is acceptable to the water purveyor and the Missouri Department of Natural Resources.

(2) Premises having internal **cross-connections** that are not correctable, or intricate plumbing arrangements which make it impractical to ascertain whether or not **cross-connections** exist.

(3) Premises where entry is restricted so that inspection for **cross-connections** cannot be made with sufficient frequency or at sufficiently short notice to assure that **cross-connections** do not exist.

(4) Premises having a repeated history of **cross-connections** being established or reestablished.

(5) Premises, which due to the nature of the enterprise therein, are subject to recurring modification or expansion.

(6) Premises on which any substance is handled under pressure so as to permit entry into the public water supply, or where a **cross-connection** could reasonably be expected to occur. This shall include the handling of process waters and cooling waters.

(7) Premises where materials of a toxic or hazardous nature are handled such that if backsiphonage or backpressure should occur, a serious health hazard may

result.

(c) The following types of facilities fall into one or more of the categories of premises where an approved air gap separation or reduced pressure principle backflow prevention device is required by the water purveyor and the Missouri Department of Natural Resources to protect the public water supply and must be installed at these facilities unless all hazardous or potentially hazardous conditions have been eliminated or corrected by other methods to the satisfaction of the water purveyor and the Missouri Department of Natural Resources:

(1) Aircraft and missile plants

(2) Automotive plants

(3) Auxiliary water systems

(4) Beverage bottling plants

(5) Canneries, packing houses, and reduction plants

(6) Car washing facilities

(7) Chemical manufacturing, processing, compounding or treatment plants

(8) Film laboratories

(9) Fire protection systems

(10) Hazardous waste storage and disposal sites

(11) Hospitals, mortuaries, clinics

(12) Irrigation and sprinkler systems

(13) Laundries and dye works

(14) Metal manufacturing, cleaning, processing and fabricating plants

(15) Oil and gas production, storage or transmission properties

(16) Paper and paper products plants

(17) Plating plants

(18) Power plants

(19) Printing and publishing facilities

(20) Radioactive material processing plants or nuclear reactors

(21) Research and analytical laboratories

(22) Rubber plants, natural and synthetic

(23) Sewage and storm drainage facilities, pumping stations

(24) Water front facilities and industries

(25) Potable water dispensing stations

(Ord. No. 91-2035, § 6, 2-26-91)

Sec. 22-72. Backflow prevention devices.

(a) Any backflow prevention device required by this division shall be of a model or construction approved by the water purveyor and the Missouri Department of Natural Resources.

(1) Air gap separation to be approved shall be at least twice the diameter of the supply pipe, measured vertically above the top rim of the vessel, but in no case less than one (1) inch.

(2) A double check valve assembly or a reduced pressure principle backflow prevention device shall be approved by the water purveyor, and shall appear on the current "list of approved backflow prevention devices" established by the Missouri Department of Natural Resources.

(b) Existing backflow prevention devices approved by the water purveyor at the time of installation and properly maintained shall, except for inspection and maintenance requirements, be excluded from the requirements of this division so long as the water purveyor is assured that they will satisfactorily protect the water system. Whenever the existing device is moved from its present location, or requires more than minimum maintenance, or when the water purveyor finds that the maintenance constitutes a hazard to health, the unit shall be replaced by a backflow prevention device meeting the requirements of this division.

(Ord. No. 91-2035, § 7, 2-26-91)

Sec. 22-73. Installation.

(a) Backflow prevention devices required by this division shall be installed at a location and in a manner approved by the water purveyor and shall be installed at the expense of the water consumer.

(b) Backflow prevention devices installed on the service line to the consumer's water system shall be located on the consumer's side of the water meter, as close to the meter as is reasonably practical, and prior to any other connection.

(c) Backflow prevention devices shall be located so as to be readily accessible for maintenance and testing, protected from freezing, and where no part of the device will be submerged or subject to flooding by any fluid.

(Ord. No. 91-2035, § 8, 2-26-91)

Sec. 22-74. Inspection and maintenance.

(a) It shall be the duty of the consumer at any premises on which backflow prevention devices required by this division are installed to have inspections, tests, and overhauls made in accordance with the following schedule or more often where inspections indicate a need.

(1) Air gap separations shall be inspected at the time of installation and at least every twelve (12) months thereafter.

(2) Double check valve assemblies shall be inspected and tested for tightness at the time of installation and at least every twelve (12) months thereafter. They shall be dismantled, inspected internally, cleaned, and repaired whenever needed and at least every thirty (30) months.

(3) Reduced pressure principle backflow prevention devices shall be inspected and tested for tightness at the time of installation and at least every twelve (12) months thereafter. They shall be dismantled, inspected internally, cleaned, and repaired whenever needed and at least every five (5) years.

(b) Inspections, tests, and overhauls of backflow prevention devices shall be made at the expense of the water consumer and shall be performed by a State of Missouri Certified backflow prevention device tester.

(c) Whenever backflow prevention devices required by this division are found to be defective, they shall be repaired or replaced at the expense of the consumer without delay.

(d) The water consumer must maintain a complete record of each backflow prevention device from purchase to retirement. This shall include a comprehensive listing that includes a record of all tests, inspections, and repairs. Records of inspections, tests, repairs, and overhauls shall be made available to the water purveyor upon request.

(e) Backflow prevention devices shall not be bypassed, made inoperative, removed, or otherwise made ineffective without specific authorization by the water purveyor.

(Ord. No. 91-2035, § 9, 2-26-91)

Sec. 22-75. Violations and penalties.

(a) The water purveyor shall deny or discontinue, after reasonable notice to the occupants thereof, the water service to any premises wherein any backflow prevention device required by this division is not installed, tested, and maintained in a manner acceptable to the water purveyor, or if it is found that the backflow prevention device has been

removed or bypassed, or if an unprotected **cross-connection** exists on the premises.

(b) Water service to such premises shall not be restored until the consumer has corrected or eliminated such conditions or defects in conformance with this division to the satisfaction of the water purveyor.

(Ord. No. 91-2035, § 10, 2-26-91)

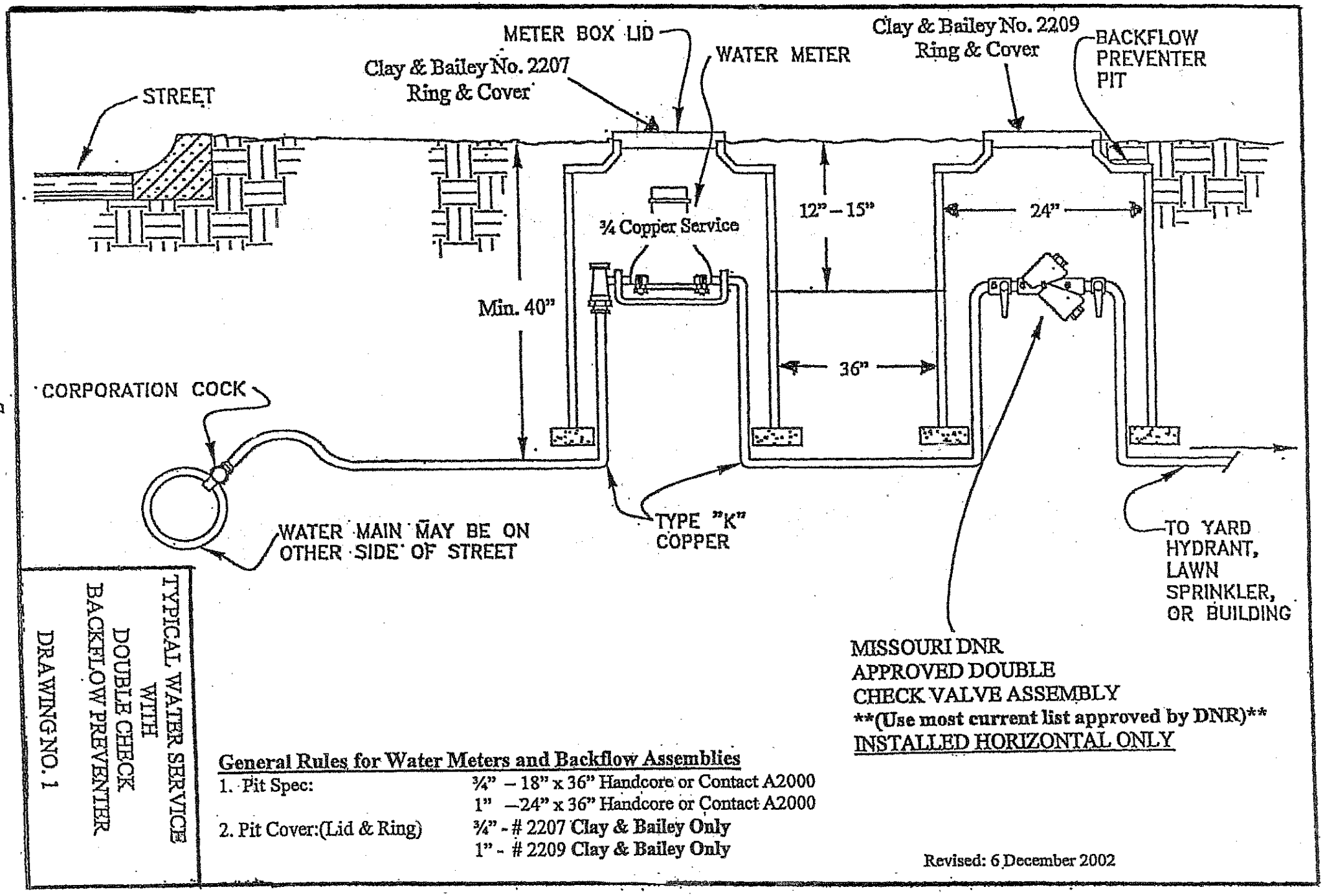
METER BOX LID
Clay & Bailey No. 2207
Ring & Cover
WATER METER
Clay & Bailey No. 2209
Ring & Cover
BACKFLOW
PREVENTER
PIT
STREET
¾ Copper Service
12" – 15"
24"
Min. 40"
36"
CORPORATION COCK
WATER MAIN MAY BE ON
OTHER SIDE OF STREET
TYPE "K"
COPPER
TO YARD
HYDRANT,
LAWN
SPRINKLER,
OR BUILDING
MISSOURI DNR
APPROVED DOUBLE
CHECK VALVE ASSEMBLY
(Use most current list approved by DNR)
INSTALLED HORIZONTAL ONLY
TYPICAL WATER SERVICE
WITH
DOUBLE CHECK
BACKFLOW PREVENTER
DRAWING NO. 1
General Rules for Water Meters and Backflow Assemblies
1. Pit Spec: ¾" – 18" x 36" Handcore or Contact A2000
1" –24" x 36" Handcore or Contact A2000
2. Pit Cover:(Lid & Ring) ¾" - # 2207 Clay & Bailey Only
1" - # 2209 Clay & Bailey Only
Revised: 6 December 2002

P2207
Type "T"
Kansas City, Mo. Code
Weight

Lid ..... 26 lbs.
Ring ..... 35 lbs.

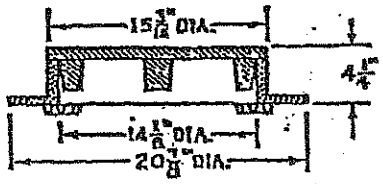

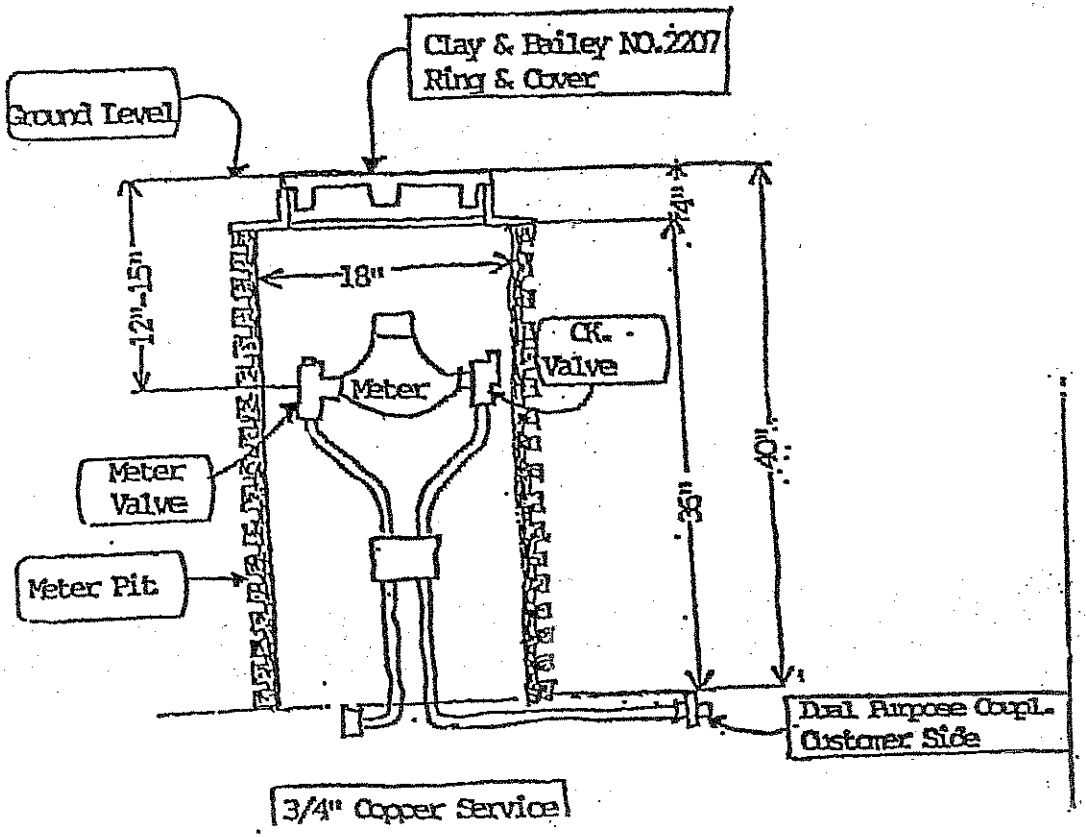

3/4" Copper Service

No. 2209
K. C., Mo. Type T19
Weight

Lid ..... 42 lbs.
Ring ..... 54 lbs.

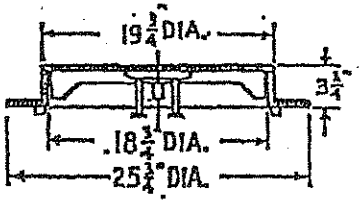

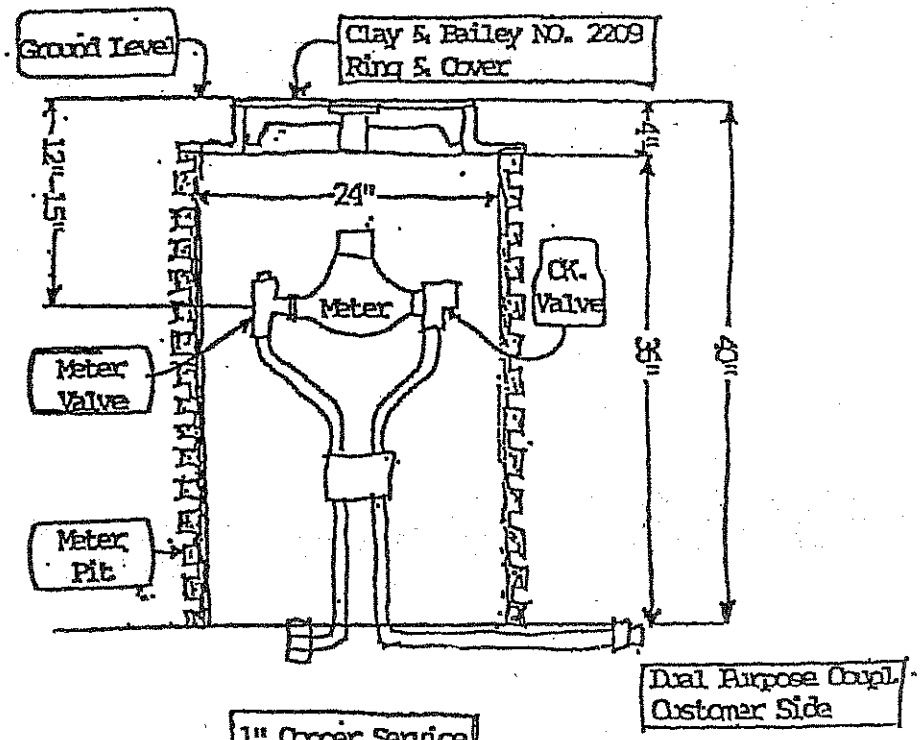

1" Copper Service

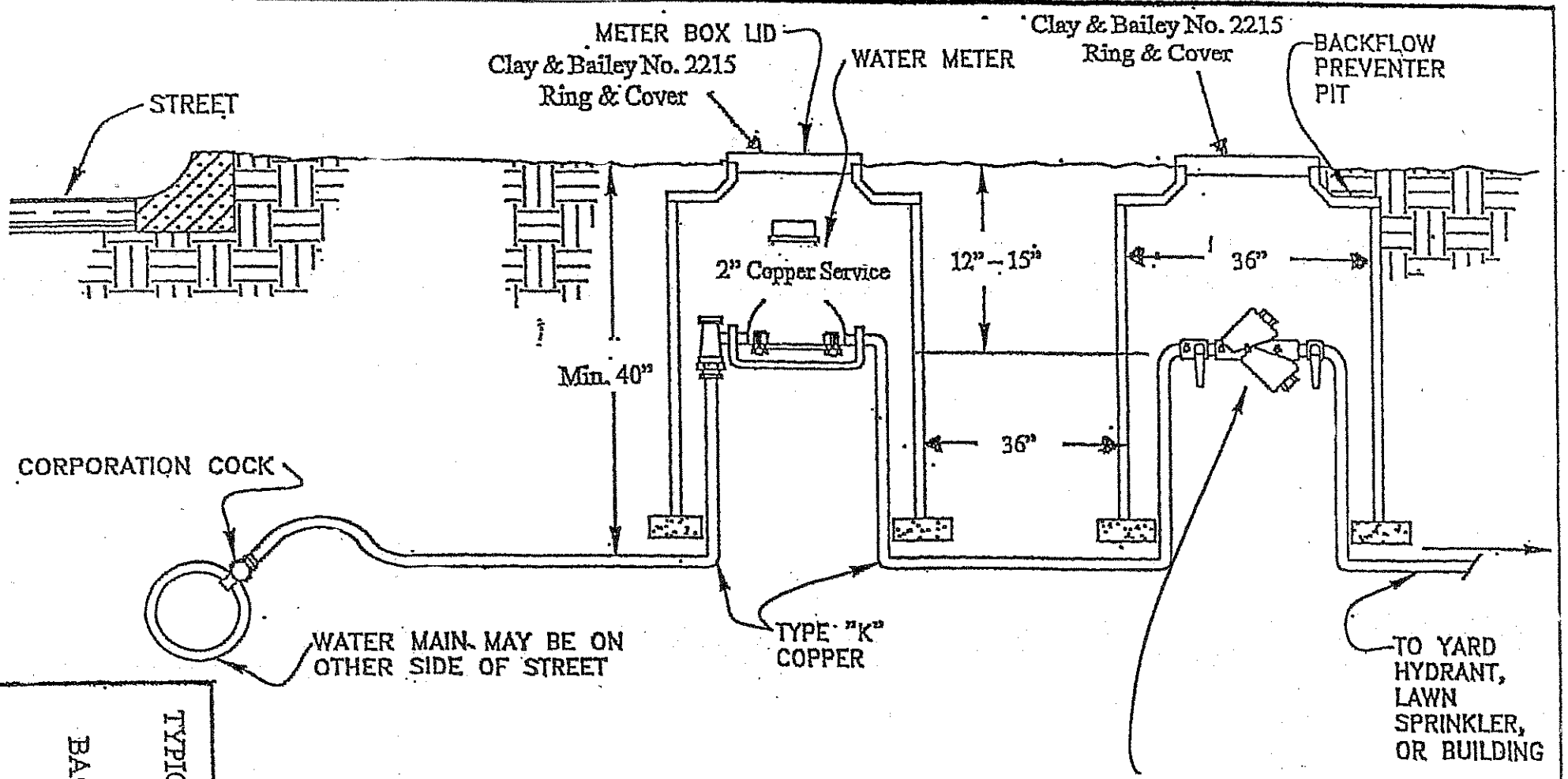

MISSOURI DNR
APPROVED DOUBLE
CHECK VALVE ASSEMBLY
(Use most current list approved by DNR)
INSTALLED HORIZONTAL ONLY

TYPICAL 2" WATER SERVICE
WITH
DOUBLE CHECK
BACKFLOW PREVENTER
DRAWING NO. 2

General Rules for Water Meters and Backflow Assemblies

1. Pit Spec:	1 1/2" – 24" x 36" Handcore or Contact A2000
	2" – 24" x 36" Handcore or Contact A2000
2. Pit Cover:(Lid & Ring)	1 1/2" - # 2215 Clay & Bailey Only
	2" - # 2215 Clay & Bailey Only

Revised: 6 December 2002

KANSAS CITY, MO. TYPE "D"

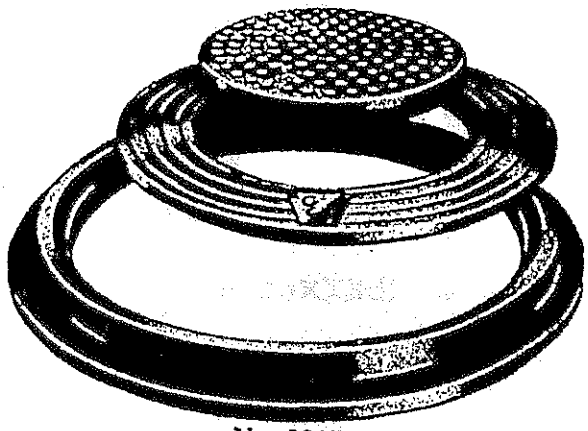

No. 2215
Weight

Inner Lid	95 lbs.
Outer Lid	155 lbs.
Ring	170 lbs.

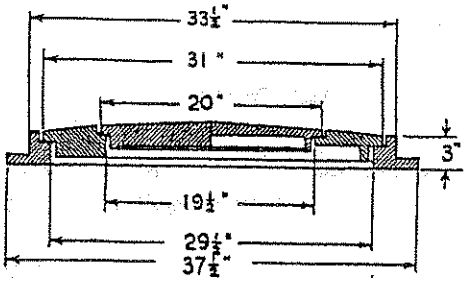

INSTALLATION INFORMATION FOR 1½" AND 2" METERS

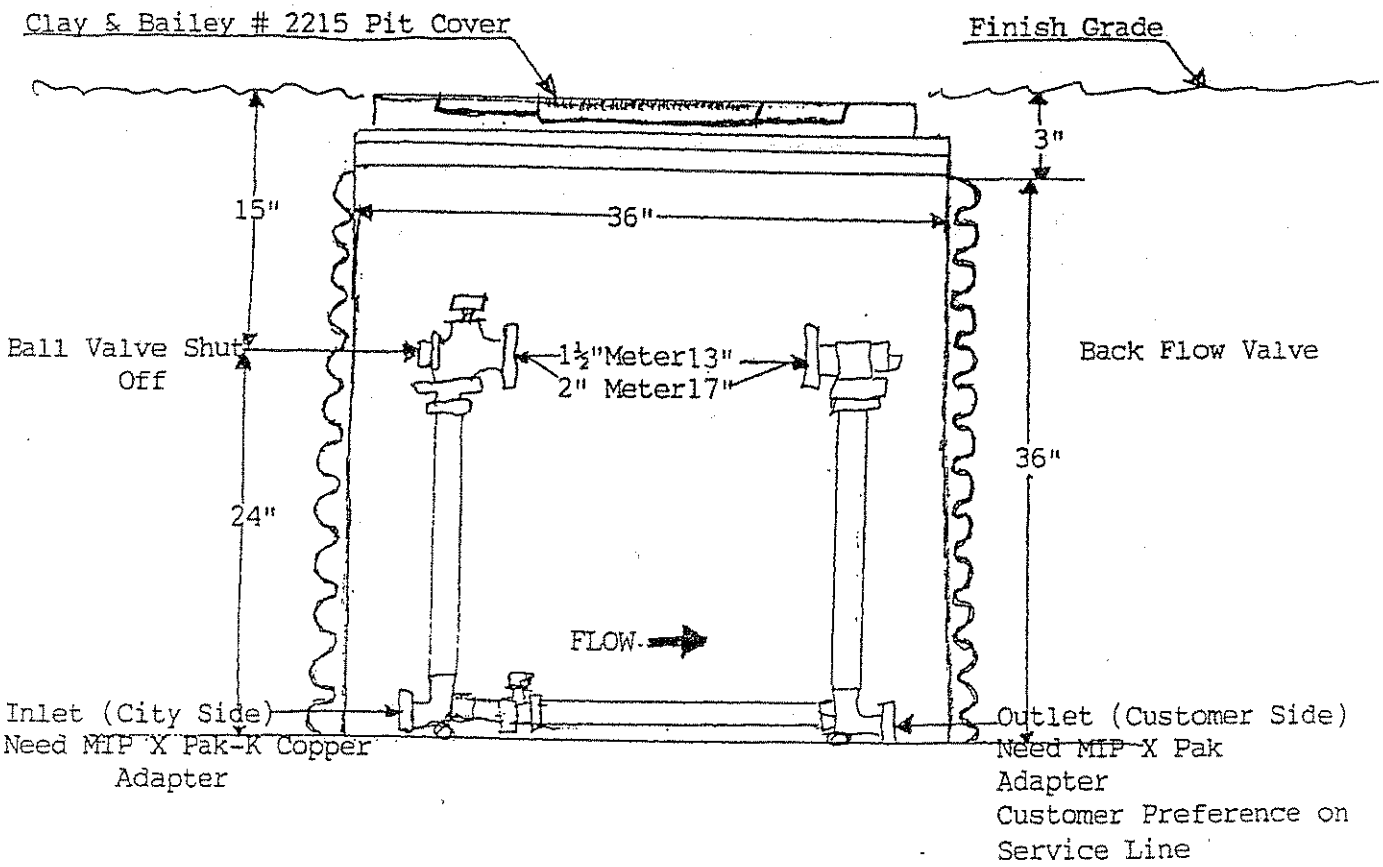

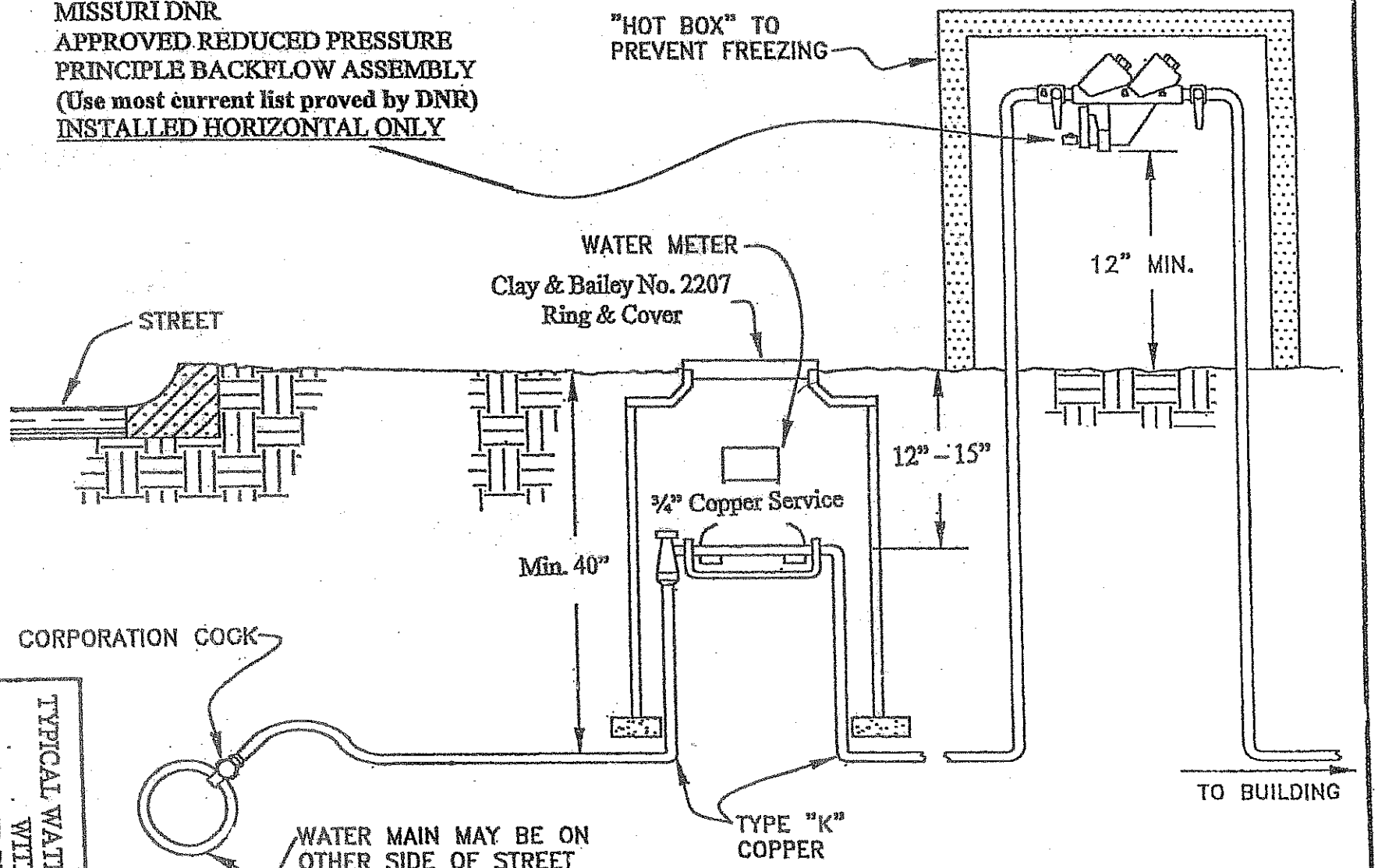

General Rules for Water Meters and Backflow Assemblies

1. Pit Spec: ¾" – 18" x 36" Handcore or Contact A2000
   1" – 24" x 36" Handcore or Contact A2000
2. Pit Cover:(Lid & Ring) ¾" - # 2207 **Clay & Bailey Only**
   1" - # 2209 **Clay & Bailey Only**

TYPICAL WATER SERVICE
WITH
REDUCED PRESSURE
PRINCIPLE BACKFLOW
PREVENTER OUTSIDE

DRAWING NO. 3

P2207
Type "T"
Kansas City, Mo. Code
Weight

Lid ..... 26 lbs.
Ring ..... 35 lbs.

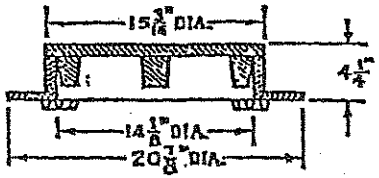

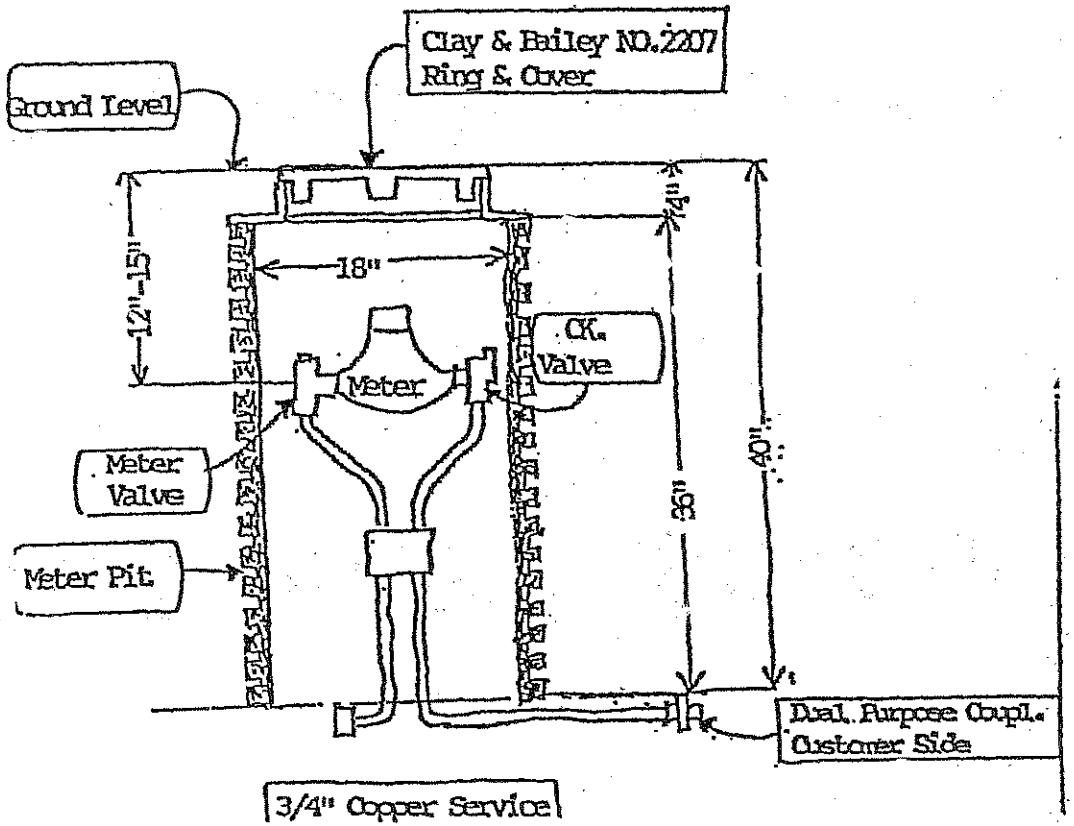

No. 2209
K. C., Mo. Type T19
Weight

Lid ..... 42 lbs.
Ring ..... 54 lbs.

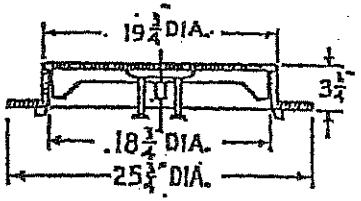

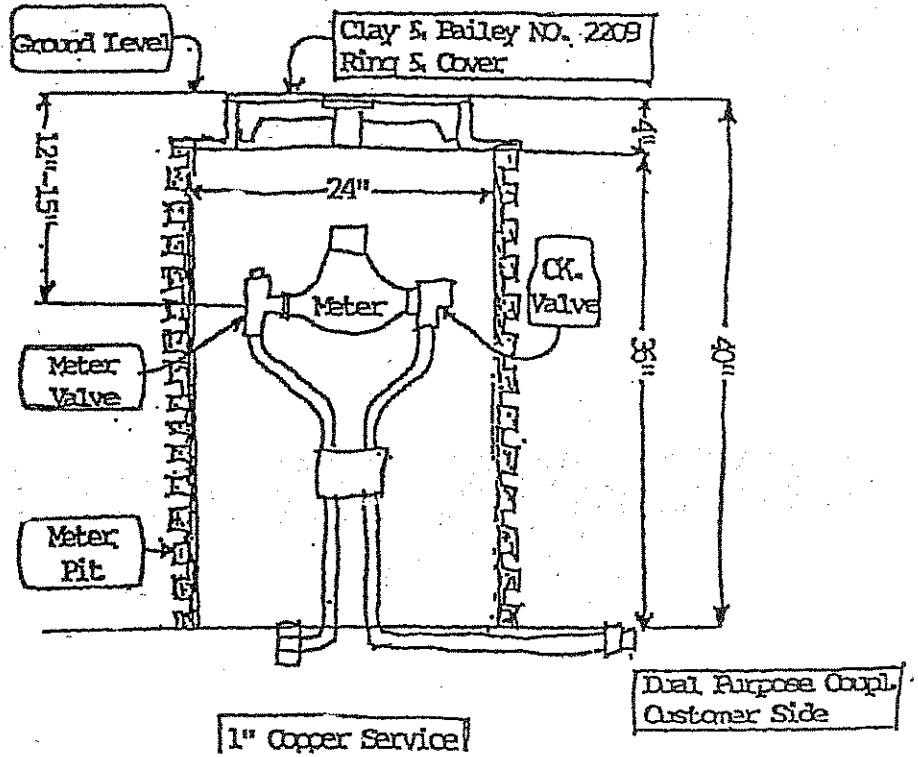

DOUBLE CHECK
DETECTOR CHECK

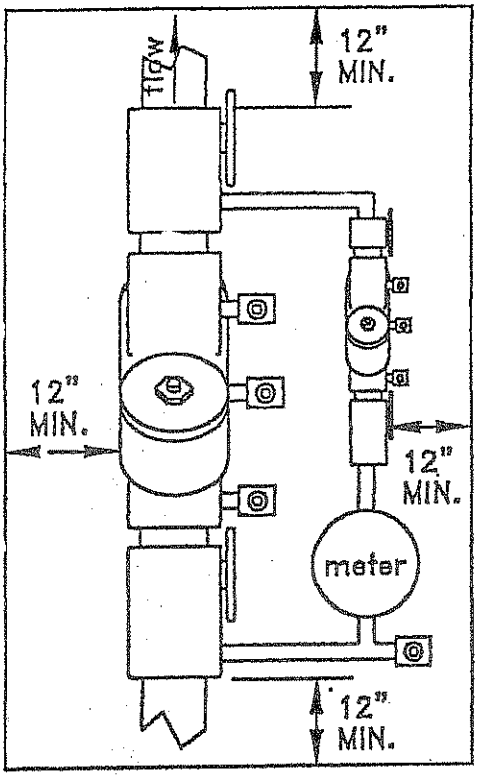

REDUCED PRESSURE
PRINCIPLE

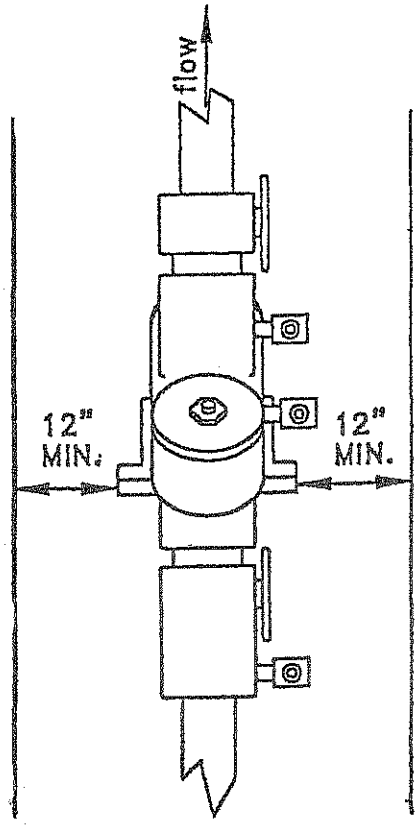

Revised: 6 December 2002

DOUBLE CHECK

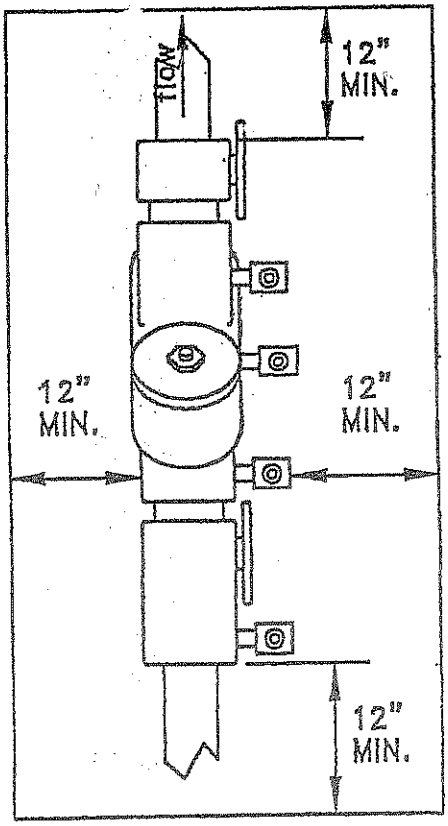

1. Test cock location may vary with each brand. Double Check and Reduced Pressure will have 4 test cocks each and Double Check Detector Check will have 7 test cocks.

2. Measurements are minimum from all walls and other appurtenances.

3. Double Check and Double Check Detector may be installed in building or Water Dept. approved vault. Reduced Pressure Principle may be installed either above ground or in building.

4. All assemblies will be installed in the horizontal position.

5. All assemblies will be installed with easy access for maintenance and repairs.

6. Minimum clearance from bottom of vault will be no less than 18".

7. Maximum height shall not exceed 48".

TYPICAL INSTALLATION
OF
BACKFLOW PREVENTION
ASSEMBLIES

DRAWING NO. 4

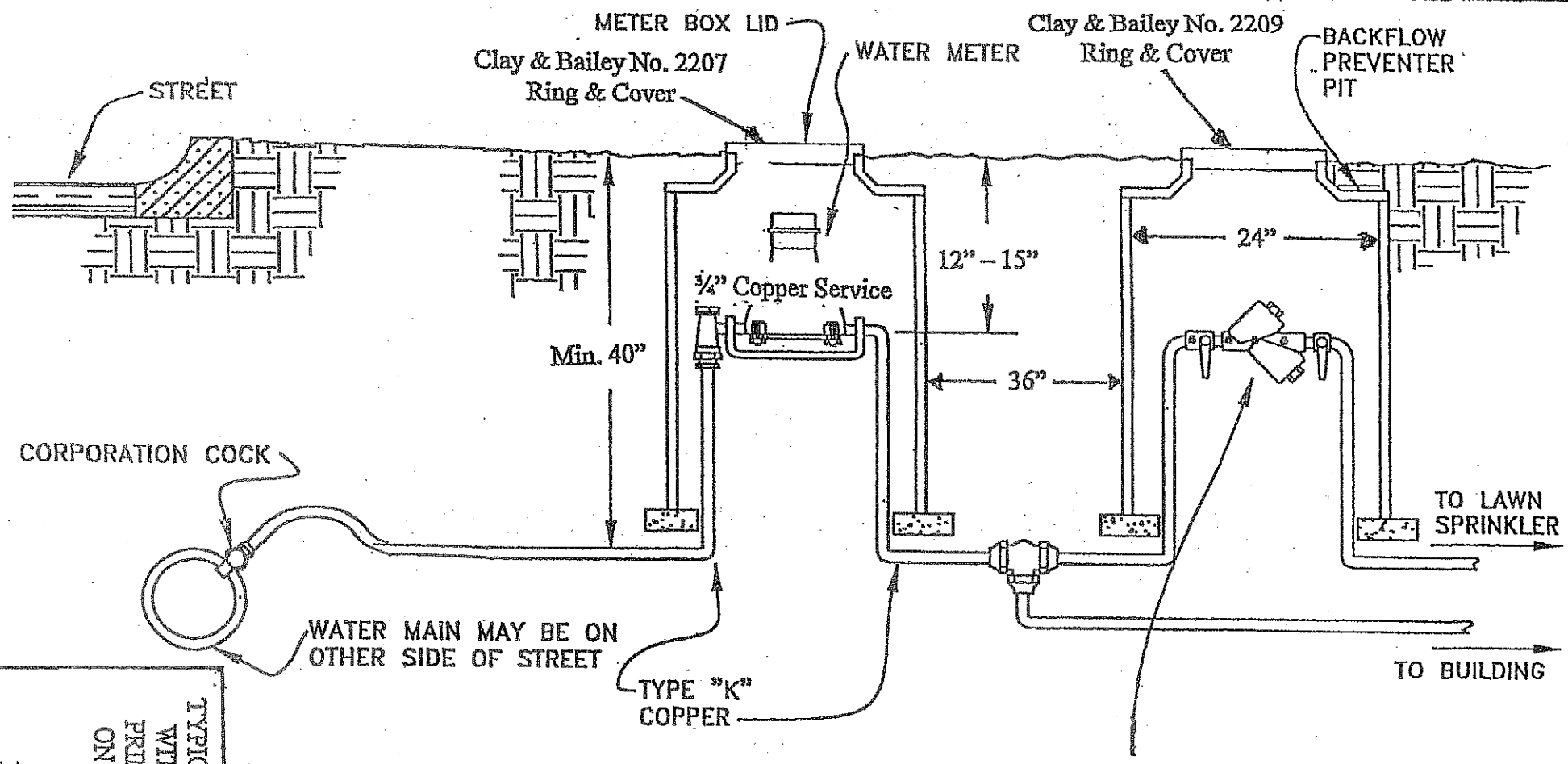

MISSOURI DNR
APPROVED DOUBLE
CHECK VALVE ASSEMBLY
(Use most current list approved by DNR)
INSTALLED HORIZONTAL ONLY

TYPICAL WATER SERVICE
WITH DOUBLE CHECK
PRINCIPLE BACKFLOW
ON LAWN SPRINKLER
BRANCH

DRAWING NO. 5

General Rules for Water Meters and Backflow Assemblies

1. Pit Spec: ¾" – 18" x 36" Handcore or Contact A2000
   1" – 24" x 36" Handcore or Contact A2000
2. Pit Cover:(Lid & Ring) ¾" - # 2207 **Clay & Bailey Only**
   1" - # 2209 **Clay & Bailey Only**

Revised: 6 December 2002

P2207
Type "T"
Kansas City, Mo. Code
Weight

Lid .....26 lbs.
Ring .....35 lbs.

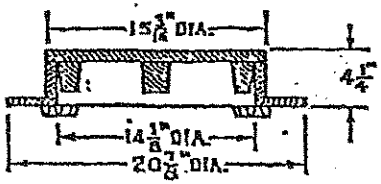

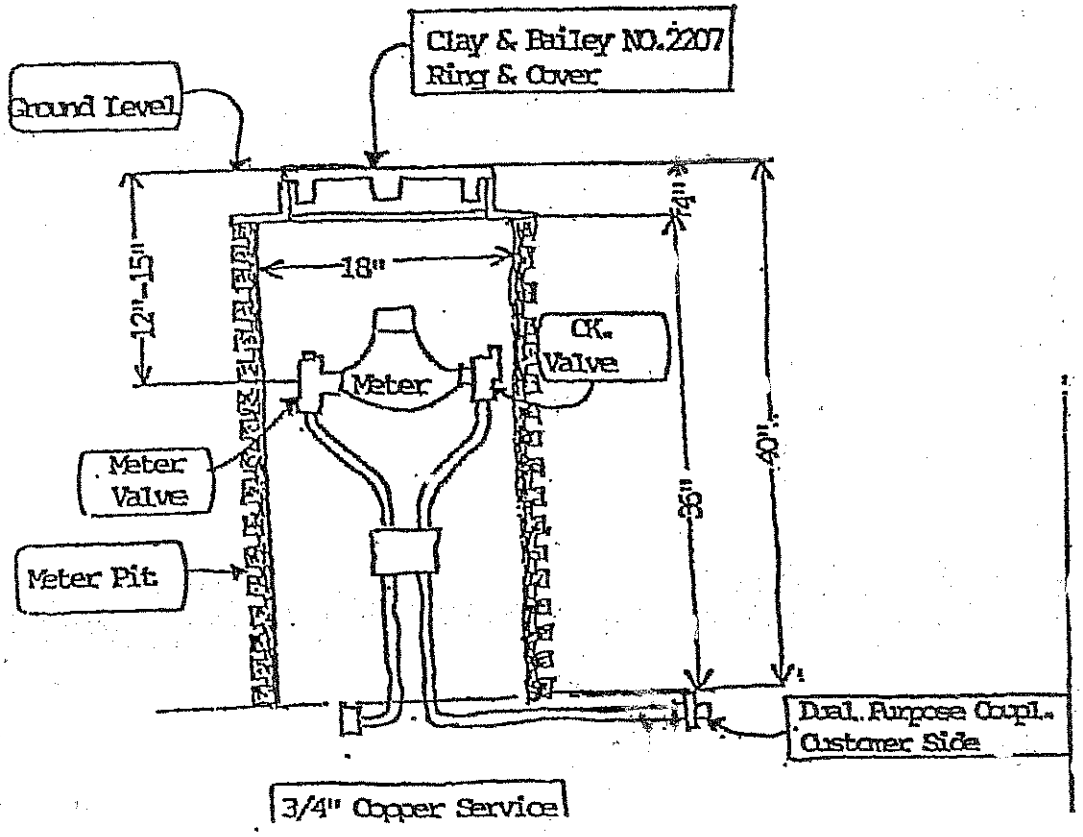

No. 2209
K. C., Mo. Type T19
Weight

Lid .....42 lbs.
Ring .....54 lbs.

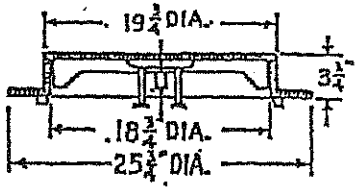

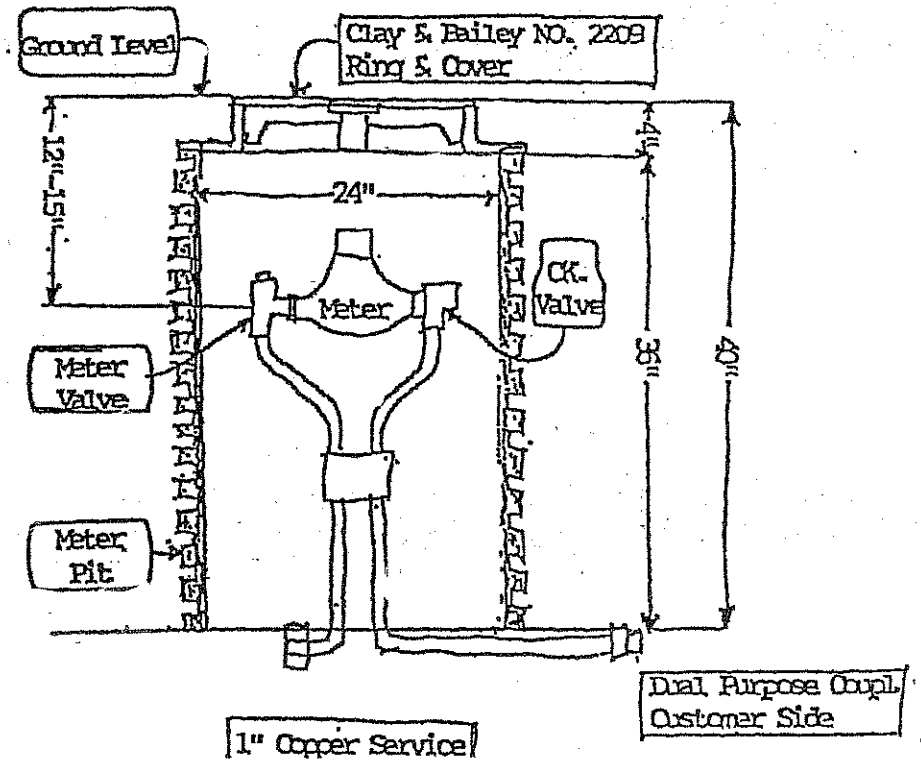

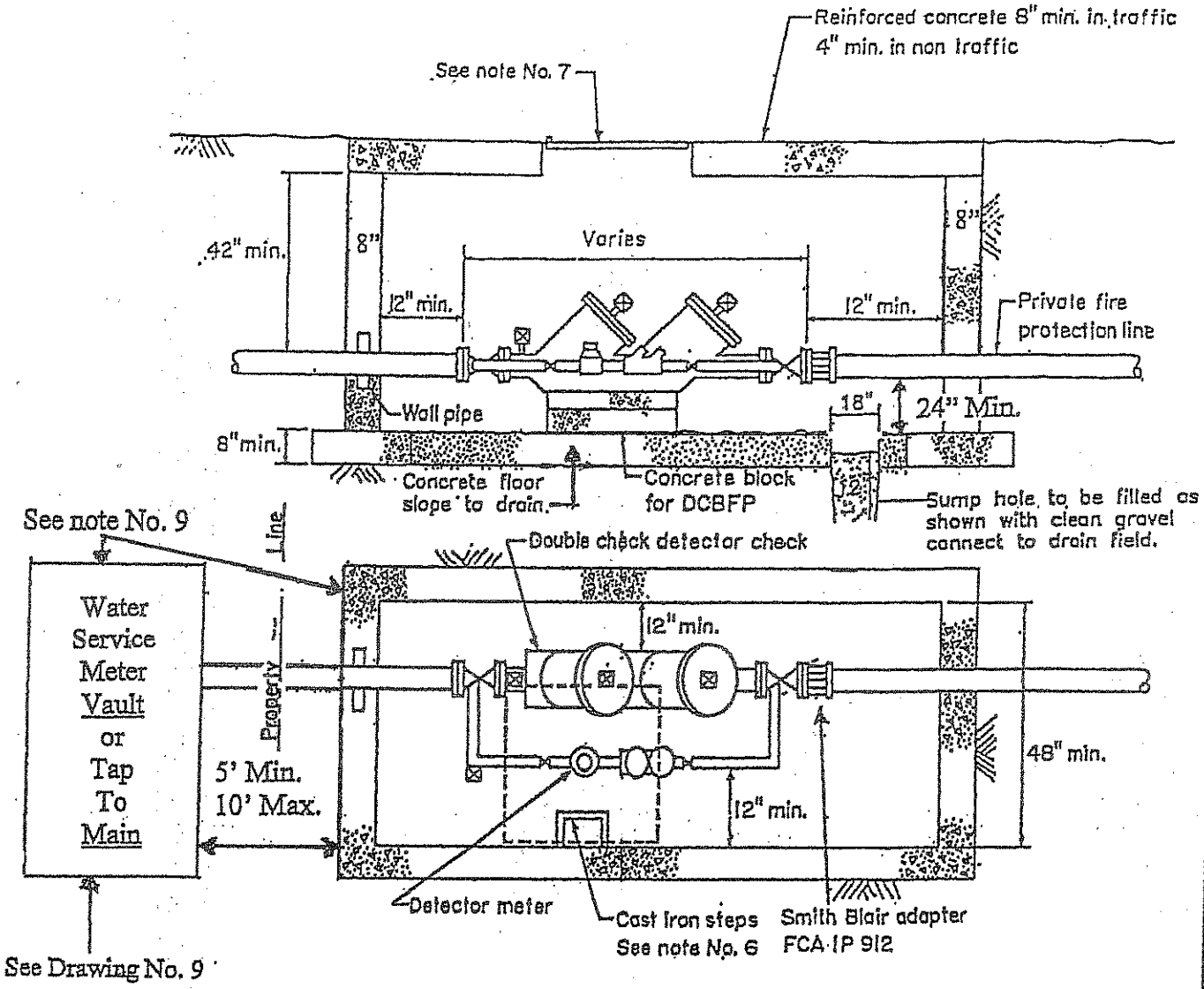

General Rules

1. Meter vault walls to be poured concrete, concrete block or precast concrete.
2. Meter vault roof to be reinforced concrete with opening centered over detector (ensure entry access to steps).
3. Meter vault to be located when possible outside traffic are and where surface water will nor drain into it. Vault must be kept free of water.
4. All pipe to be Ductile Iron Class 52.
5. All fittings must be brass.
6. Cast Iron steps Clay & Bailey No. 2104 or approved equal on 16" centers.
7. In Traffic: Clay & Bailey No. 2215, ring and lid with handle and outer lid or approved equal. Non-Traffic: Bilco "K – 1" Single Leaf Aluminum or approved equal.
8. A Department of Natural Resources approved Double Check Detector Check Backflow Preventor must be used. As of January 1, 1987 the DNR requires Fire Sprinkler Systems using chemicals must have a DNR approved Reduced Pressure Principal Backflow Preventor installed. This device can be installed in an underground vault only with the written approval of the DNBR with a copy to the Engineering Division of the Water Dept.
9. Distance between the Double Check Detector Vault and Water Service Meter Vault will be a minimum of 5' and maximum of 10', as well as, no bends in-between vaults.

Revised: 6 December 2002

METER VAULT
FOR
DOUBLE CHECK
DETECTOR CHECK

Drawing No. 6

Subject to revision without notice

GENERAL SERVICE				FIRELINE			
SIZE (***)	BY-PASS SIZE (*)	A	B	10" C	8" C	6" C	4" C
(**) 1 ½"	NA	13"	12"	140"	130"	130"	130"
(**) 2"	NA	17"	16"	140"	130"	130"	130"
3"	1 ½"	18 ¾"	24"	159"	157"	156"	155"
4"	2"	22 ¼"	32"	174"	172"	171"	170"
6"	3"	27 ¾"	48"	206"	204"	203"	202"

(*) If higher continuous rate of flow is required, a larger By-Pass may be permitted, but not larger than primary domestic service.

(**) Ford Meter Setter W866 or W877 without by-pass or approved equal.

(***) For 5/8", ¾", 1" meters use Ford Yoke #501, 502, 503 or approved equal. No by-pass required.

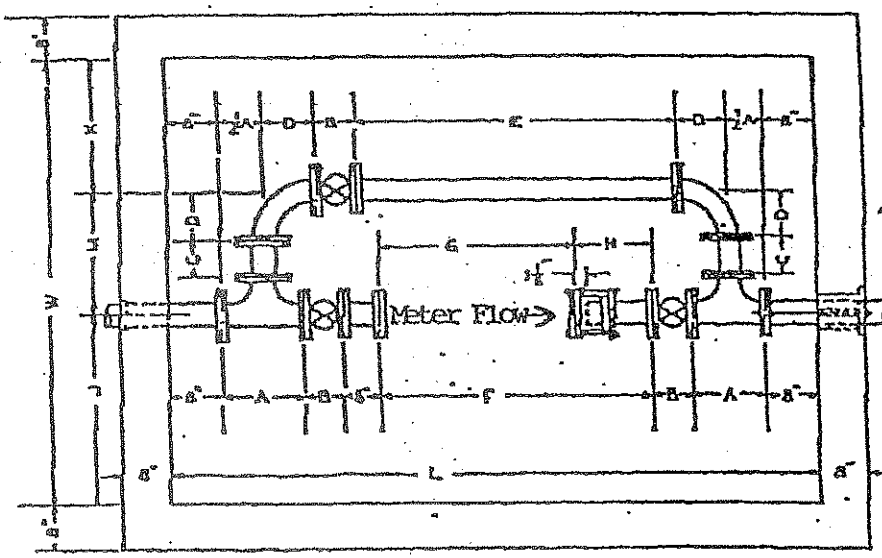

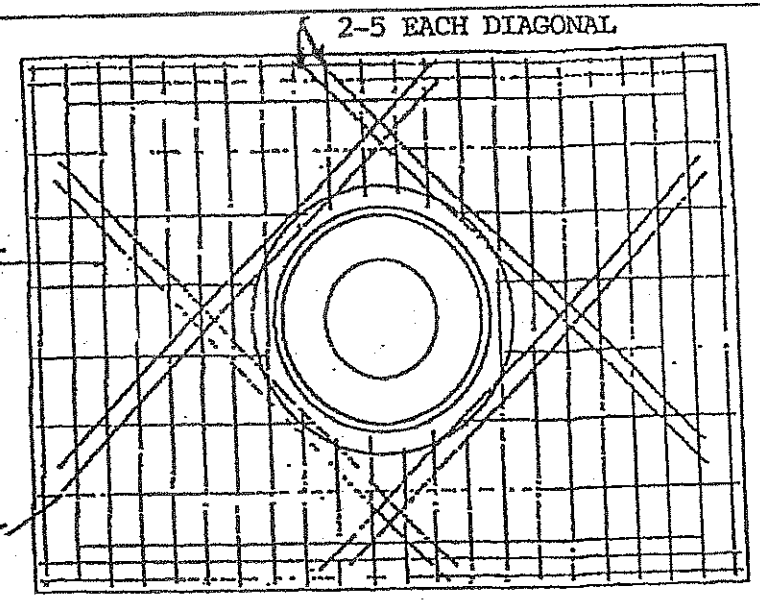

NOT FOR VEHICULAR TRAFFIC LOADS.

FOR VEHICULAR TRAFFIC-10,000 LB. WHEEL LOAD:
1. INCREASE THICKNESS TO 12"
2. INCREASE RE-BAR FROM #5 TO #7 USING SAME NUMBER OF BARS.

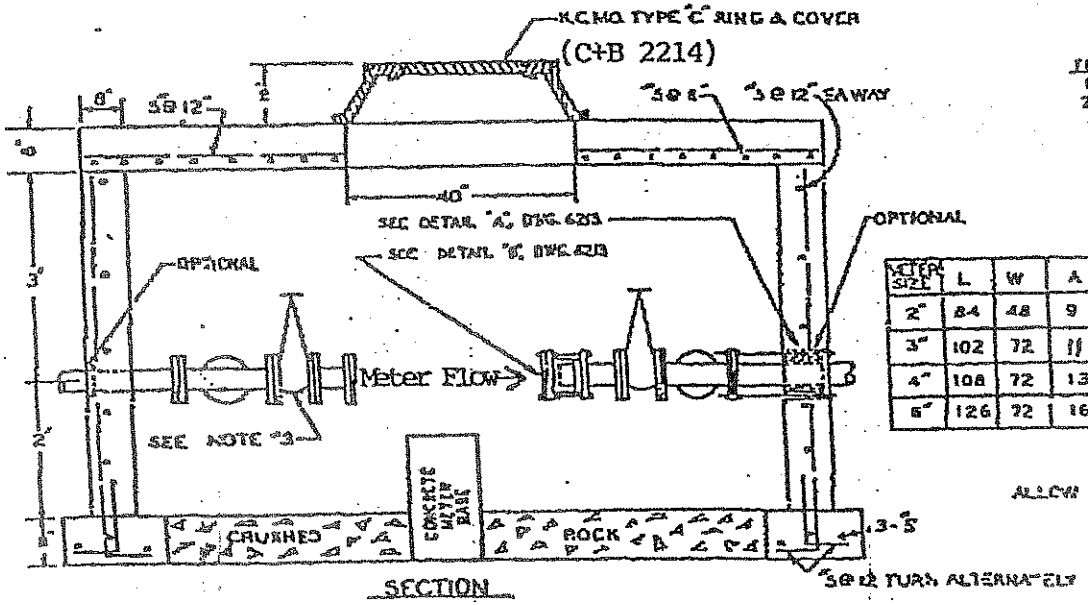

SINGLE METER PITS

METER SIZE	L	W	A	B	C	D	E	F	G	H	J	K	M
2"	84	48	9	7	8	6½	38	30	17	13	18	11	19
3"	102	72	11	8	12	7¾	51½	42	17-33	25-9	24	22¾	25¼
4"	108	72	13	9	12	9	52	42	20-33	22-9	24	20½	27½
6"	126	72	16	10½	9	11½	61	51	24-36½	27-11½	24	19½	28½

ALL DIMENSIONS IN INCHES

ALLOW 1/16" PER GASKET IN FLANGE FITTINGS

NOTE: 1. POUR FOOTING ON FIRM UNDISTURBED EARTH.
2. ALL PIPING IN METER PIT SHALL BE CLP.
3. VALVES SHALL BE GATE TYPE; BY-PASS VALVE SHALL BE O.S.&Y.
4. WALLS TO BE DOUBLE FORMED.
5. ALL RE-BARS TO HAVE 3/4" COVER.
6. CONCRETE SHALL BE K.C.B. 500-1-A.

POURED IN PLACE

NO.	DATE	BY	REVISIONS

METER PIT & SETTING WITH BY-PASS
FOR SINGLE 2", 3", 4 & 6" METERS
WATER DEPARTMENT — CITY OF KANSAS CITY, MISSOURI
DRAWING NO. 32 09
DESIGNED BY ____ APPROVED BY ____
DETAILED BY ____ DATE 4-3-53

13

Meter Vault for Water Service Meter
Drawing No. 7

3,4 and 6 inch meters

METER WELL COVERS

KANSAS CITY, MO. TYPE "C"

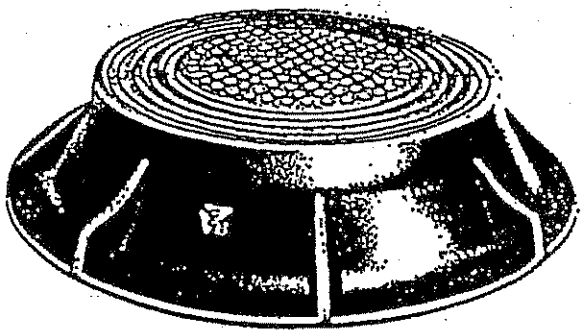

No. 2214

Weight
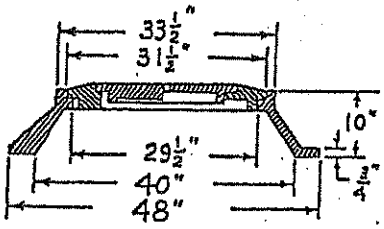
Inner Lid	95 lbs.
Outer Lid	155 lbs.
Ring	420 lbs.